SERVICE MANUAL

FREEDOM FREESTYLE WM

Product style codes: QX, CA, DX

12V MOTORIZED LATERAL ARM BOX AWNING, LEGLESS

RV

Read this manual before installing or servicing this product. Failure to follow the instructions and safety precautions in this manual can result in personal injury and/or cause the product to not operate properly.

Table of Contents

Product Overview **1**

Canopy Replacement **2**

Replacing the Lead Rail **4**
- Installing the New Lead Rail 4

Arm Replacement **6**
- Replacing the Lead Rail Connector 7
- Replacing the Case Connector 8
  - Removing a Configuration 1 Connector 8
  - Removing a Configuration 2 Connector 9
  - Installing the New Case Connector 10
  - Pitch Adjustment 10
- Middle Arm Replacement 11

Motor Replacement **12**
- Remove Old Motor - Tubular Motor 12
- Install the New Motor – Tubular Motor 13

Setting the Motor Limits – Awnings produced prior to 10/1/2026 ..... **14**
  - Out Limit Switch 14
  - IN Limit Switch 14

Adjusting the Extend Limit – Awnings produced after 10/1/2026 ..... **15**

Troubleshooting and Diagnostics **16**
  - Common Operational Items 16

Electrical **18**
- Wiring Schematic 18
- Replacing the Direct Response Module 18

Standard Maintenance **19**
- Fabric Care 19
  - Mildew 19
  - Pooling 19
  - Leaking 19
- Motor Maintenance 19
- Arm Noise 20
- Manual Override 20

Part Number Listing **21**
- Serial Number/Part Number Location 21
- Freedom Freestyle WM Illustrated Parts List 21

Proprietary Statement

The Freedom Freestyle WM Awning is a product of Carefree of Colorado, located in Broomfield, Colorado, USA. The information contained in or disclosed in this document is proprietary to Carefree of Colorado. Every effort is made to ensure that the information presented in this document is accurate and complete. However, Carefree of Colorado assumes no liability for errors or for any damages that result from the use of this document.

The information contained in this manual pertains to the current configuration of the models listed on the title page. Earlier model configurations may differ from the information given. Carefree of Colorado reserves the right to cancel, change, alter or add any parts and assemblies, described in this manual, without prior notice.

Carefree of Colorado agrees to allow the reproduction of this document for use with Carefree of Colorado products only. Any other reproduction or translation of this document in whole or part is strictly prohibited without prior written approval from Carefree of Colorado.

Safety Information

⚠ ⚠	**This is the safety alert symbol. It is used to alert individuals to potential personal injury hazards. Obey all safety messages that follow this sysmbol to avoid possible personal injury or death.**
⚠ WARNING	**Indicates a hazardous situation, which if not avoided, could result in death or serious bodily injury.**
⚠ CAUTION	**Indicates a hazardous situation, which if not avoided, may result in minor or moderate bodily injury.**
NOTICE	**Indicates a situation that may result in equipment-related damage.**

General Safety:

⚠ WARNING This product can expose you to chemicals including Di-isodecyl phthalate (DIDP), Vinyl Chloride and Formaldehyde, which are known to the state of California to cause cancer or birth defects or other reproductive harm. For more information visit www.P65warnings.ca.gov

⚠ WARNING Shock Hazard. Always disconnect battery or power source before working on or around the electrical system.

⚠ WARNING Always wear appropriate safety equipment (i.e. goggles).

⚠ CAUTION Always use appropriate lifting devices and/or helpers when lifting or holding heavy objects.

NOTICE When using fasteners, do not over tighten. Soft materials such as fiberglass and aluminum can be "stripped out" and lose the ability to grip and hold.

PRODUCT OVERVIEW

Freedom Awnings are state of the art lateral arm awnings. When retracted, the housing provides protection against the elements while the streamlined styling blends in with the coach sidewall. The tensioned canopy fabric allows the awning to be extended partially or fully for best shade coverage.

Each unit is equipped with lateral support arms. No vertical arms interfere with coach sidewalls, custom graphics or equipment that may be mounted on the sidewalls.

Freedom Freestyle WM Specifications:

- Fully retractable and self-storing;
- Motorized;
- The sealed awning motor operates on standard 12VDC (range 10VDC to 14VDC);
- Case and frame are constructed of high-strength aluminum extrusions, protected with a polyester paint finish;
- Stainless steel fasteners and hardware.

SPECIFICATIONS

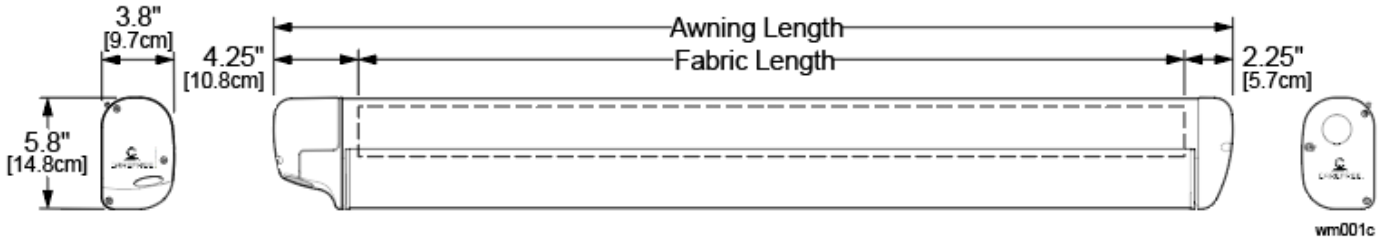

WIDTHS:	inches	96	101	118	138	157	177	197
	centimeters	244	257	300	350	400	450	500
EXTENSION:		72" (175cm)	80" (200cm)	98" (250cm) note				
		NOTE: Style Code DX (4m length) uses 3 arms with a shorter extension of 80"						
LEAD RAIL SUPPORT:		4m or less: 2 Lateral Spring Arms; 4.5 & 5m: 3 Lateral Spring Arms						
POSITION CONTROL:		12V Motorized w/ tubular motor						
		Standard: 12V Direct Response						
		Optional: BT12 Wireless Awning Control System						

MOTOR SPECIFICATIONS			
Motor Type:	Tubular		
Power:	12VDC	*Minimum:* 10VDC	*Output:* 30 Watts
	Nominal Current: 2.5Amps		*Max Current:* 14Amps (stall @ min voltage)
Torque:	*Continuous:* 6Nm/4.5 ft-lbs.		*Stall:* 32Nm/23.6 ft-lbs.
Speed:	24 rpm		

COLORS AVAILABLE			
Case:	Satin, White or Black	*Minimum:* 10VDC	*Output:* 30 Watts
Fabric:	Vinyl, Acrylic		*Max Current:* 14Amps (stall @ min voltage)

CANOPY REPLACEMENT

This procedure requires two people.

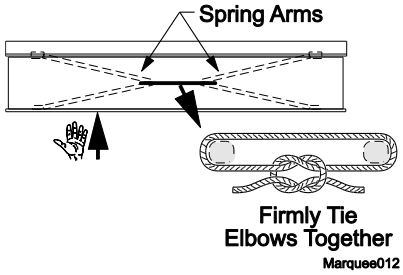

1. Open the awning 18"-24".
2. Disconnect power to the awning.
3. Carefully push the lead rail toward the case so that the arms collapse and the fabric is slack. While holding the lead rail in this position, firmly tie the elbows of the spring arms together. Use a minimum 1/2" rope - do not use bungee cords. When tying the rope, use a non-slip knot such as a square knot or equivalent.

⚠ CAUTION Failure to secure the lead rail as described will allow the spring arms to extend out possibly causing personal injury and damage to the awning.

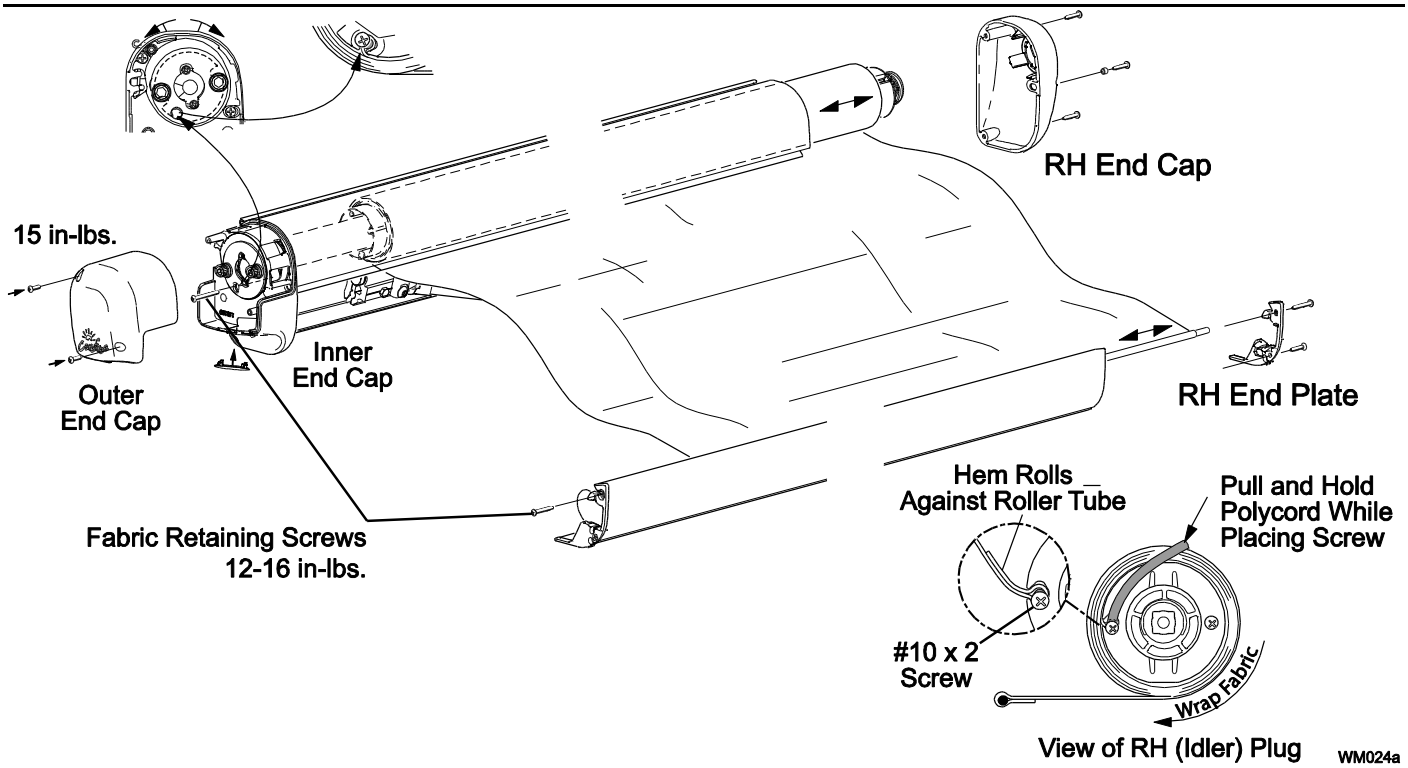

1. Remove the two (2) screws holding the outer end cap. Set the cap and screws aside.
2. On the motor side, remove the fabric retaining screw. It may be necessary to rotate the roller tube to align the screw with the access hole in the inner cap.
3. Remove the fabric retaining screw from the left lead rail end plate.
4. Remove the RH lead rail end plate and the RH end cap.
5. Slide the roller tube and fabric out of the case and lead rail.
6. Remove the fabric retaining screw located through the RH end plug.
7. Unroll the old fabric and slide off the roller tube.
8. Unfold the replacement fabric.

NOTICE While the awning fabric is fairly robust, care must be taken not to snag it while sliding the new fabric into the roller tube or lead rail.

Tip: Lightly spraying the slots with a dry silicone lubricant will help the fabric slide into the slot without staining the material.

9. Slide the black polycord of the fabric into the fabric slot. Orient the fabric with the hem on the top (the hem will then roll against the roller tube). Center the fabric in the roller tube.
10. After the fabric is centered, on the RH end plug, pull and hold the excess polycord to one side of the fabric slot. Place one (1) #10 x 2 PHSD screw through the fabric slot hole and polycord. The screw must be positioned to thread into the metal of the roller tube slot and the edge of the polycord. The screw action will pull the polycord further into the slot hole. DO NOT OVERTIGHTEN, maximum torque 16 in-lbs.
11. After the screw is installed, trim the excess polycord.
12. Roll the fabric onto the roller tube. Note the direction of the wrap as shown. The view is of the RH plug. Allow adequate fabric to extend past the roller tube to cover the distance to the lead rail..
13. Slide the fabric into the lead rail and the roller tube into the case.
14. Align the roller tube with the motor drive and bearing. Press the roller tube into the case.
15. Align the RH end cap with the roller tube and case and attach using the screws and spacer removed previously. Torque screws 15 in-lbs.
16. On the motor side, align the fabric slot of the roller tube and the access slot through the inner end cap.
17. Attach the fabric retaining screw through the motor bearing and into the roller tube.
18. Open and close the awning to confirm that the fabric rolls and unrolls squarely. Adjust the fabric position in the lead rail as required.
19. Center the fabric in the lead rail. Trim any excess polycord flush with the inside of the lead rail end plates.
20. Attach the RH end plate and the fabric retaining screws (both ends).

    NOTE: The top screw secures the fabric in the lead rail. The screw should be positioned to thread into the metal of the lead rail and the edge of the polycord.
21. Reattach the outer end cap on the LH side. Torque screws to 15 in-lbs.
22. After installing the canopy, it may be necessary to adjust the motor limits for motorized awnings. Refer to "Adjusting the Motor Limits" on page **Error! Bookmark not defined.**.

REPLACING THE LEAD RAIL

This procedure requires a minimum of two people. This can be done while the awning is mounted on the vehicle. If being done before the awning is mounted, set the awning on a clean hard surface such as the floor of the shop.

1. Open the awning completely. There should be some slack in the fabric. If necessary, adjust the motor limits so that the motor can extend far enough to create slack in the fabric (refer to page **Error! Bookmark not defined.**).

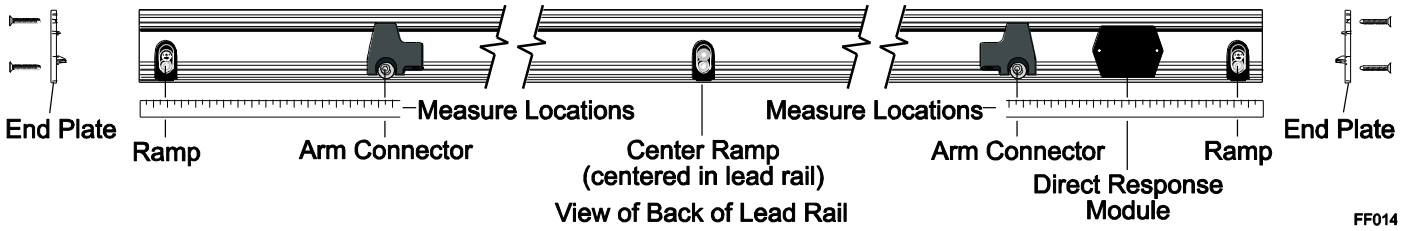

2. Remove the LH and RH end plates and set aside.
3. Carefully measure and record the locations of the ramps, arm connectors and Direct Response module.
4. Loosen and slide out the outer ramps.
5. Loosen the screws on the motion sensor module.
   5.1. Direct Response Module: Twist the brackets slightly and lift the sensor and brackets away from the lead rail. Disconnect the module from the wire harness. Quick connects are found behind the module.
   5.2. BT12 Module: Slide the bracket and module out of the lead rail.

   NOTE: It will be necessary to hold and support the lead rail during the removal and assembly.
6. Loosen the arm connector screw for one arm and slide the arm and connector out of the lead rail. Allow the arm to extend fully and support the arm with a ladder or scaffolding.
7. Repeat for the second arm.

   NOTE: If the unit has a center arm, loosen the screw. The arm connector is moved as the lead rail is slipped from the canopy.
8. Loosen and slide out the center ramp.
9. Slide the lead rail off the canopy fabric. If the unit has a center arm, slide the arm out of the lead rail while sliding the lead rail off the fabric.

INSTALLING THE NEW LEAD RAIL

1. Mark the new lead rail with the dimensions and locations measured previously.

   NOTICE **While the awning fabric is fairly robust, care must be taken not to snag it while sliding the new fabric into the roller tube or lead rail.**

   Tip: Lightly spraying the slots with a dry silicone lubricant will help the fabric slide into the slot without staining the material.
2. Lift the lead rail up and slide onto the fabric. Center the fabric in the lead rail. If the unit has a center arm, begin sliding the arm into the lead rail at the same time.
3. Slide the center ramp into the lead rail. Do not tighten at this time.
4. Slide one arm connector into the lead rail.
5. Slide the other arm connector into the lead rail.
6. Align the arm connectors with the measurement marks made previously and tighten the connector screws to 25-30 in-lbs.
7. Install the motion sensor module.
   7.1. Direct Response Module: Route the sensor wire harness behind the new connector. Reconnect the module to the wire harness. Position the module and bracket and tighten the screws.
   7.2. BT12 Module: Slide the bracket and module into the lead rail. Position the bracket and module and tighten the screws.

8. Slide the outer ramps onto the lead rail and align with the measurement marks. Align the center ramp in the center of the lead rail. Tighten all ramp screws to 25-30 in-lbs.
9. Attach the end plates. The top screws are the fabric retaining screws.

   NOTE: The top screw secures the fabric in the lead rail. The screw should be positioned to thread into the metal of the lead rail and the edge of the polycord.
10. After installing the lead rail, it may be necessary to adjust the motor limits for motorized awnings. Refer to "Adjusting the Motor Limits" on page **Error! Bookmark not defined.**.

ARM REPLACEMENT

This procedure is for replacing the outside arms. For the middle arm on 4.5 and 5 meter awnings, refer to page 11.

⚠ CAUTION The spring arm is under tension to open. Use extreme care and firmly hold the spring arms during assembly and disassembly to avoid any sudden or unexpected movement by the arm. Serious personal injury and/or property damage could occur.

1. Open the awning to the maximum extension or as wide as possible. Adjust the motor limit or extend limit (see page **Error! Bookmark not defined.**) to allow the lead rail to over extend and create slack in the fabric. This is to minimize the spring tension in the arms during this procedure.
2. Disconnect power to the awning.
3. Use a scaffold, ladder or other means to support the lead rail.
4. If replacing the LH (motor side) arm, carefully remove the sensor cable from the wire channel on top of the arm, if present. Use care to not bend, break or compromise the cable.
5. At the lead rail, firmly hold the spring arm and remove the clip and pin that secures the arm to the lead rail connector. Set parts aside to be reused.
6. Allow the arm to extend below the lead rail. Support the end of the arm.

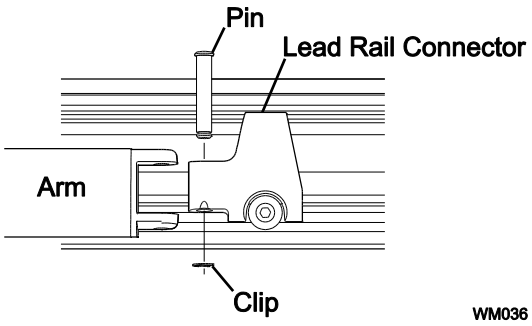

7. Loosen the pitch adjustment screws.
8. Remove the arm from the case connector
   8.1. For original case connector:
      8.1.1. Remove the retaining clip from the case connector.
      8.1.2. Remove the arm from the awning and set aside
   8.2. For current case connector:
      8.2.1. Remove the bolt and washers form the side of the case connector.
      8.2.2. Remove the arm from the awning and set aside. Do not lose shim.

If replacing the lead rail connector, go to page 7 then return here.

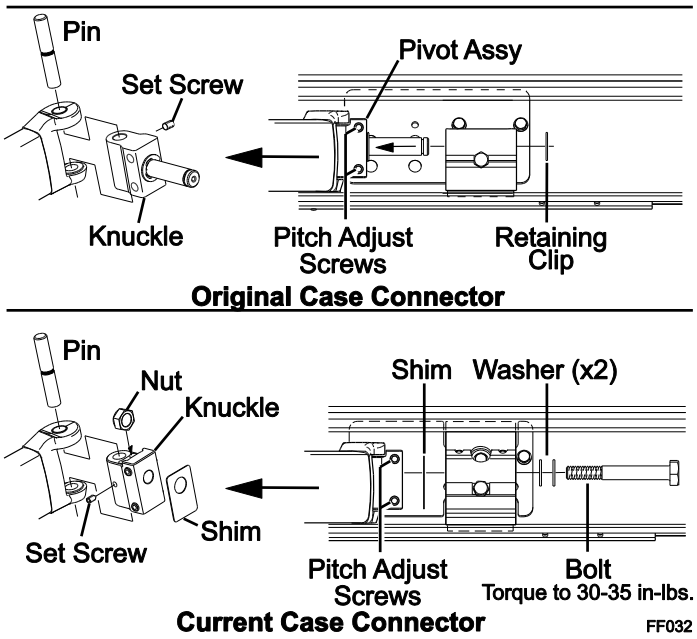

9. Remove the pivot assembly from the arm by removing the set screw and pin.
10. If the arm has wire channel mounted for the sensor cable, carefully remove the channel from the arm to reuse on the new arm.
11. Install the pivot assembly on the new arm using the pin and set screw removed previously. Torque set screw to 15-20 in-lbs.
12. Using two people firmly hold the new arm assembly and remove the shipping ties. Allow the arm to open slowly to its maximum extension.

⚠ CAUTION When the arm is closed, it can open with significant force. Use care when opening the arm.

Tip: Use a floor or ground cover and place one knuckle and arm half on the ground. Have one person firmly hold the arm half on the ground while the second person carefully opens the other arm half.

13. If the sensor cable needs to be routed on the replacement arm:
    13.1. Attach a piece of wire channel to the top of each section of the arm using double sided tape. If using new channel, cut each piece slightly shorter than the arm extrusion.
14. Lift the arm assembly into position and attach to the case connector.
    14.1. For original case connector:
        14.1.1. Secure the knuckle to the case connector with a new retaining clip (large).
    14.2. For current case connector:
        14.2.1. Attach the arm to the housing using the bolt, washers (x2) and shim. Torque bolt to 30-35 in-lbs.

        Tip: The securing nut floats inside the knuckle. Wedge a piece of foam, tape or similar material under the nut to temporarily hold it in line with the hole in the knuckle. This will aid when starting the bolt.
15. Slide the arm onto the lead rail connector and secure using the pin and clip removed previously.
16. If needed, route the sensor cable through the wire channel. At the arm joints, arch the cable slightly to avoid binding. Do not twist the cable.

    Tip: Use a small tool, such as a flat bladed screwdriver to gently spread open the channel then insert the cable. Do this for the entire length of the channel until the cable is fully inserted.
17. Remove the supports from the lead rail.
18. After replacing the arm, it will be necessary to adjust the pitch to align the lead rail and case. See page 8.
19. Adjust the motor limit or extend limit as required. See page **Error! Bookmark not defined.**.

REPLACING THE LEAD RAIL CONNECTOR

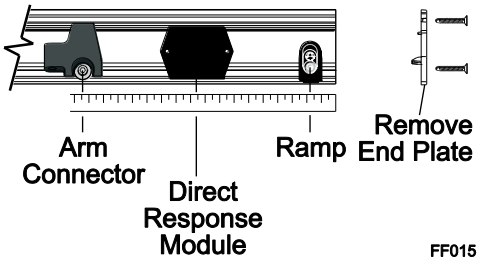

1. Remove the arm according to the instructions on page 6.
2. Remove the lead rail end plate.
3. Carefully measure and mark the location of the existing connector and ramp and sensor (when installed).
4. Loosen the securing screw and slide the existing ramp from the lead rail.
5. Loosen the screws on the sensor. Twist the brackets slightly and lift the sensor and brackets away from the lead rail. Disconnect the module from the wire harness. Quick connects are found behind the module.
6. Loosen the securing screw and slide the existing connector from the lead rail.
7. Insert the new connector assembly into the lead rail and position at the marks made previously.

   NOTICE **Failure to position the connector correctly will cause the arm and lead rail not to close correctly.**
8. Tighten the outer securing screw.
9. For the sensor cable. Route the cable behind the new connector. Reconnect the module to the wire harness. Position the module and brackets and tighten the screws.
10. Install the ramp.
11. Attach the lead rail end plate.
12. Return to “Replacing the Arm” on page 6.

REPLACING THE CASE CONNECTOR

Three configurations of the case connector have been used with the Freestyle WM awning. When replacing an earlier style connector, replace all (LH, RH and center) case connectors with the current configuration.

Illustrations show the left side connector. Instructions are the same for RH (idler) side except where noted.

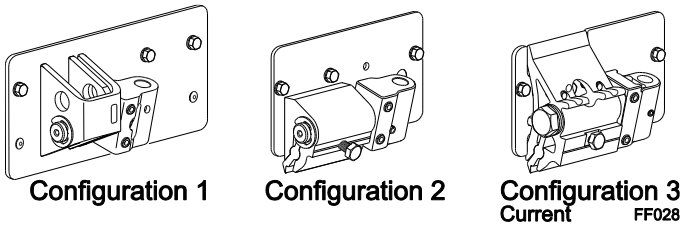

1. Open the awning until the arms are fully extended.
2. Disconnect power to the awning.

Removing a Configuration 1 Connector

1. *For idler side replacement:*
   1.1. Remove the three (3) screws and spacer and set idler endcap aside.
2. *For motor side replacement:*
   2.1. Remove the cable channel inside the case. Allow the harness to hang loosely.
   2.2. Remove the two (2) screws holding the outer end cap. Set the cap and screws aside.
   2.3. Disconnect the motor wire quick disconnects located under the outer cap.
   2.4. Remove the three (3) screws and spacer holding the inner end cap to the case. Remove the two (2) motor screws.
   2.5. Pull the inner end cap away from the case and remove the motor wires from the end cap.

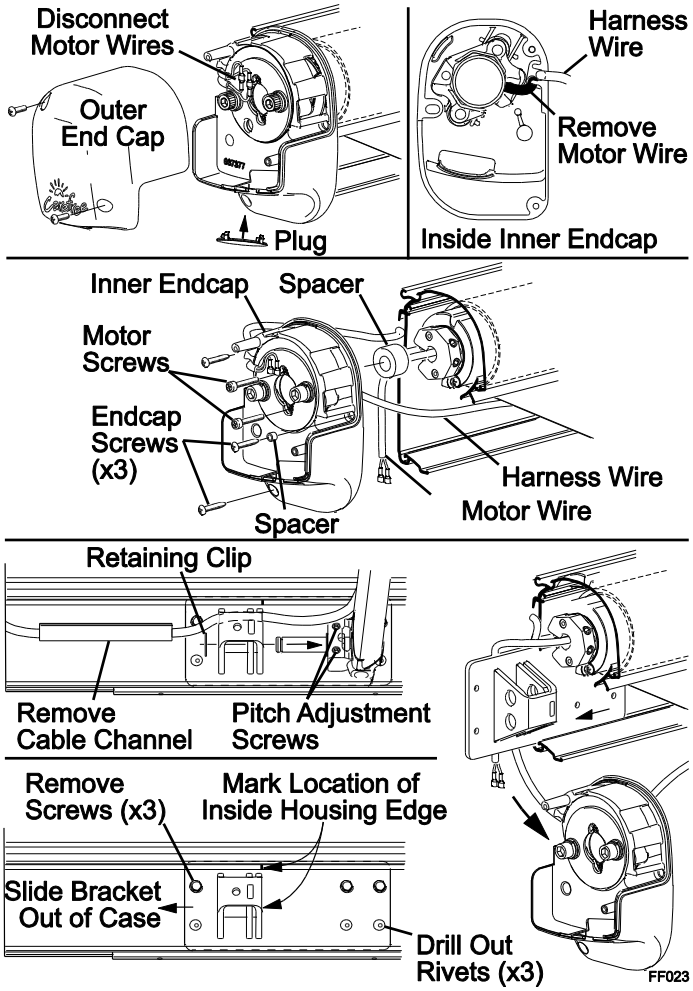

NOTICE **It is necessary to hold and support the lead rail and arm during the removal and assembly procedures to prevent damage to the awning.**

3. At the case connector, remove the retaining clip and slide the pivot assembly out of the housing.

   NOTE: *For motor side replacement:* Rotate the arm toward the endcap to provide slack in the harness.
4. In the case, mark the location of the inside edge of the connector housing, DO NOT mark the edge of the plate.
5. Drill out the three (3) rivets at the bottom of the plate.
6. Remove the three (3) screws at the top of the plate.
7. *For idler side replacement:*
   7.1. Slide the old housing out of the case.
   7.2. Align the roller tube with the endcap and attach the endcap with the screws removed previously.
8. *For motor side replacement:*
   8.1. Slide the inner endcap down along the harness to clear the end of the case.
   8.2. Slide the old connector housing out of the case.
   8.3. Align the inner end cap with the roller tube and motor. Ensure that the large spacer is positioned in the inner endcap.
   8.4. Route the motor wires and harness connectors through hole in the endcap.
   8.5. Align the screw holes in the inner end cap with the motor and attach with the screws removed previously.
   8.6. Attach the inner endcap to the awning case using the screws and spacer removed previously.
   8.7. Attach the quick connects for the motor. Make sure to match the wire colors.
   8.8. Attach the outer endcap with the screws removed previously.

Removing a Configuration 2 Connector

This procedure does not require removing the end caps.

1. Open the awning until the arms are fully extended.
2. Disconnect power to the awning.
3. Remove the cable from the wire channel inside the case and on top of arm. Allow the harness to hang loosely.

NOTICE **It is necessary to hold and support the lead rail and arm during the removal and assembly procedures to prevent damage to the awning.**

4. At the case connector, remove the retaining clip and slide the pivot assembly out of the housing.
5. In the case, mark the location of the inside edge of the connector housing, DO NOT mark the edge of the plate.
6. Loosen the clamping screw.
7. Slide the wedge out of the housing and the case.
8. Remove the three (3) screws at the top of the plate.
9. Slide the plate out of the upper groove of the case.

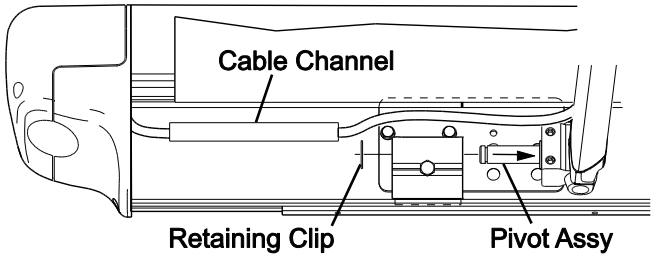

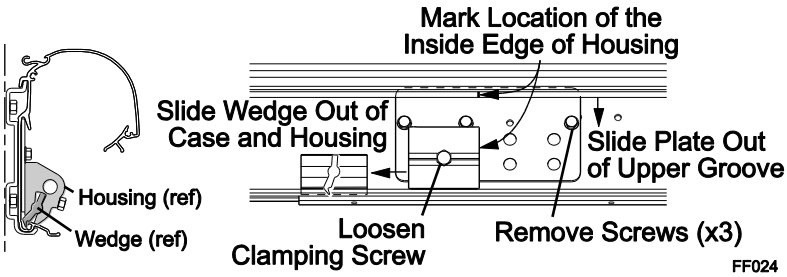

Installing the New Case Connector

1. Slide the plate of the new connector housing into the upper groove inside the case.
2. Slide the wedge into the lower groove of the case and into the new housing.
3. Align the inside edge of the housing with the mark made previously.
4. Tighten the clamping screw 25-30 in-lbs.

NOTE The new plate screw holes DO NOT match the old plate.

5. Secure the mounting plate to the case with two (2) #10 x 5/8" self-drilling screws and one (1) #10 x 1" self-drilling screw through the housing as shown.
6. Remove the pivot assembly on the arm by removing the set screw and pin.
7. Install the new pivot assembly with the set screw and pin removed previously. Torque set screw to 15-20 in-lbs.
8. Attach the arm to the housing using the bolt, washers (x2) and shim. Torque bolt to 30-35 in-lbs.

Tip: The securing nut floats inside the knuckle. Wedge a piece of foam, tape or similar material under the nut to temporarily hold it in line with the hole in the knuckle. This will aid when starting the bolt.

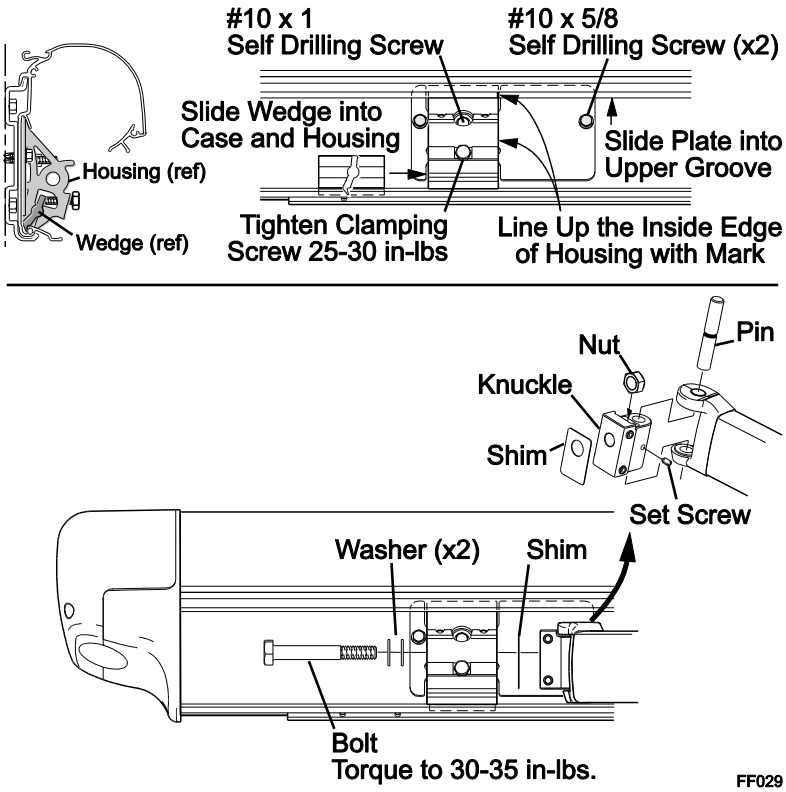

9. *For motor side replacement:*
   - 9.1. If previously removed, cut a new piece of cable channel to the appropriate length. Use the old piece as a guide.
   - 9.2. Mount the cable channel onto the back wall of the case. Remove the release paper from the back of the channel and firmly press the channel in place.
   - 9.3. Route the harness wires through the channel.
10. It will be necessary to adjust the pitch of the new connector so that the arms match in pitch.

Pitch Adjustment

The pitch for Freestyle WM can be adjusted to optimize the installation.

1. Open the awning to access the adjustment screws located on the arm case knuckles.
2. Have a second person lift up on the lead rail to relieve the pressure on the adjustment screws.
3. Using a 4mm allen wrench, loosen the top screw. Turn the bottom adjustment screw clockwise to raise the lead rail; turn the adjustment screw counterclockwise to lower the lead rail.

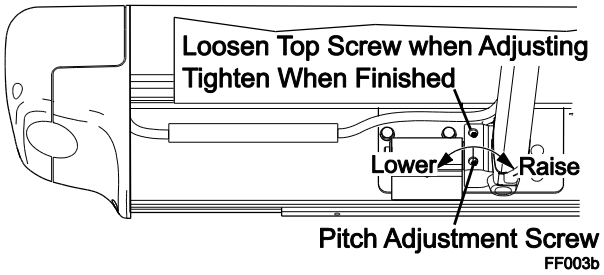

4. When the pitch is set at the desired angle, tighten the top screw.
5. Repeat for each arm. Ensure that the lead rail is parallel with the awning case.

NOTE: The Freedom Freestyle WM lead rail self-adjusts to accommodate the pitch. No adjustment is required to the lead rail when the pitch is adjusted.

MIDDLE ARM REPLACEMENT

⚠ CAUTION The spring arm is under tension to open. Use extreme care and firmly hold the spring arms during assembly and disassembly to avoid any sudden or unexpected movement by the arm. Serious personal injury and/or property damage could occur.

NOTICE The middle spring arm is different than the outer arms. Center arms can be identified by the blue dot located on or near the case connector of the arm. Do not use center arms for replacing outer arms; do not use outer arms to replace the center arm.

Tools Required: Flat blade screwdriver (1/4"), needle nose pliers, regular pliers and/or e-ring tool. New e-clips are included with the replacement arm.

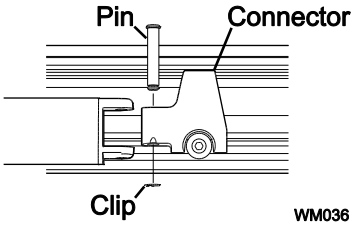

1. Open the awning 2 to 3 feet.
2. Disconnect power to the awning.
3. At the lead rail, firmly hold the spring arm and remove the clip and pin that secures the arm to the lead rail connector. Set pin aside to be reused.
4. Fold the arm and secure using a large zip tie or cord. Do not use bungee cords.
5. Loosen the pitch adjustment set screws.
6. <u>For original case connector:</u>
   6.1. Remove the retaining clip from the case connector.
   6.2. Remove the arm from the awning and set aside.
7. <u>For current case connector:</u>
   7.1. Remove the bolt and washers from the side of the case connector.
   7.2. Remove the arm from the awning and set aside. Do not lose the shim.
8. Remove the knuckle from the old arm by removing the set screw and pin.
9. Install the knuckle onto the new arm with the set screw and pin removed previously. Torque set screw to 15-20 in-lbs.

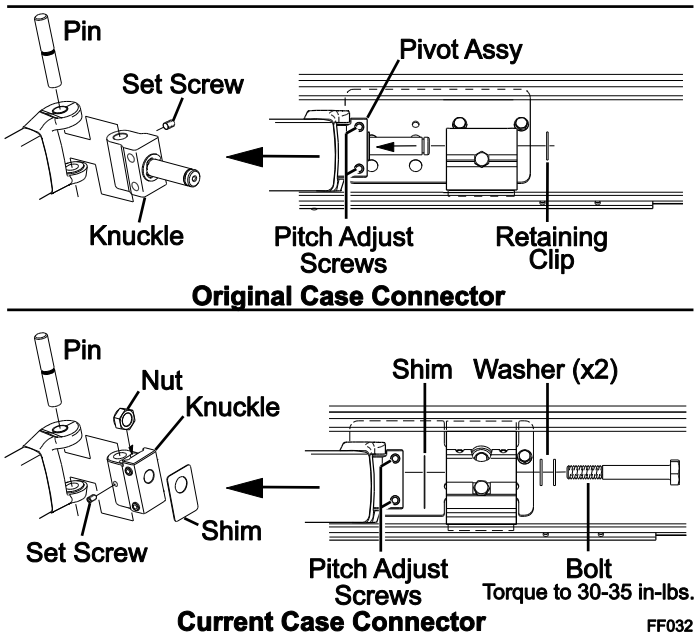

10. Lift the arm assembly into position and attach to the case connector.
    10.1. <u>For original case connector:</u> Secure the knuckle to the case connector with a new retaining clip (large).
    10.2. <u>For current case connector:</u> Attach the arm to the housing using the bolt, washers (x2) and shim. Torque bolt to 30-35 in-lbs.

    Tip: The securing nut floats inside the knuckle. Wedge a piece of foam, tape or similar material under the nut to temporarily hold it in line with the hole in the knuckle. This will aid when starting the bolt.
11. Firmly hold the new arm assembly and remove the shipping ties. Allow the arm to open slowly.
12. Slide the arm onto the lead rail connector and secure using the pin removed previously and a new clip (small).

    NOTE: When aligning the pin through the arm and lead rail connector, it may be necessary to pivot the lead rail. The lead rail is made to pivot on the lead rail connectors.
13. Tighten the lower pitch adjustment screw to set the pitch to match the outer arms.
14. Tighten the upper pitch adjustment screw.

MOTOR REPLACEMENT

1. Disconnect power to the awning.
2. If the awning is extended: Carefully push the lead rail toward the case so that the arms collapse. While holding the lead rail in this position, firmly tie the elbows of the spring arms together. Use a minimum 1/2" rope - do not use bungee cords. When tying the rope, use a non-slip knot such as a square knot or equivalent.
3. If the awning is closed: Firmly brace the lead rail in the closed position. A second person can hold the lead rail steady during the disassembly process.

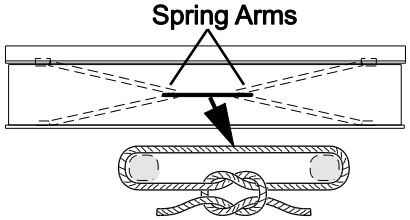

Marquee012

⚠ CAUTION Failure to secure the lead rail as described will allow the spring arms to extend out suddenly possibly causing personal injury and damage to the awning.

REMOVE OLD MOTOR - TUBULAR MOTOR

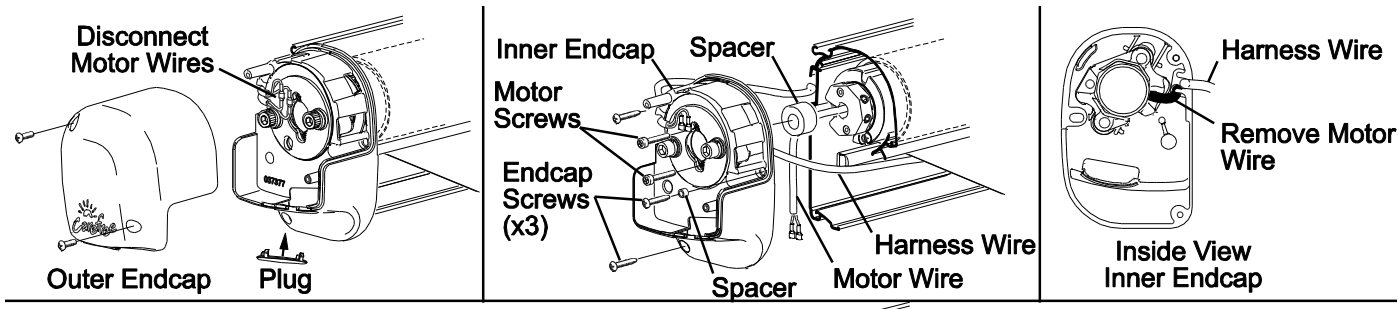

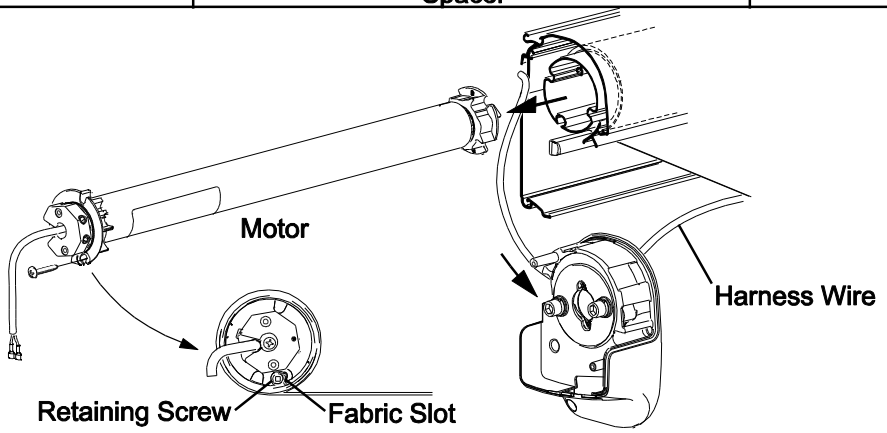

FF026

1. Remove the two (2) screws holding the outer end cap. Set the cap and screws aside.
2. Disconnect the motor wire quick disconnects located under the outer cap.
3. Remove the harness wire from the cable channel in the case and on top of the arm. Allow the harness to hang down loosely.
4. Remove the three (3) screws and spacer holding the inner end cap. Remove the two (2) motor screws.

   ⚠ CAUTION If the awning is closed when the inner end cap is detached, the spring arms will try to open. Continue to hold the lead rail closed.
5. Carefully pull the inner end cap away from the case and remove the motor wires from the end cap.
6. Slide the inner endcap down along the harness to clear the end of the case.

   ⚠ CAUTION If the awning is closed when the motor is removed, the spring arms will try to open. Support the roller tube and allow the awning to open slowly then secure the arms by tying the elbows together as described previously.
7. Remove the fabric retaining screw then pull the motor out of the roller tube and set aside.

INSTALL THE NEW MOTOR – TUBULAR MOTOR

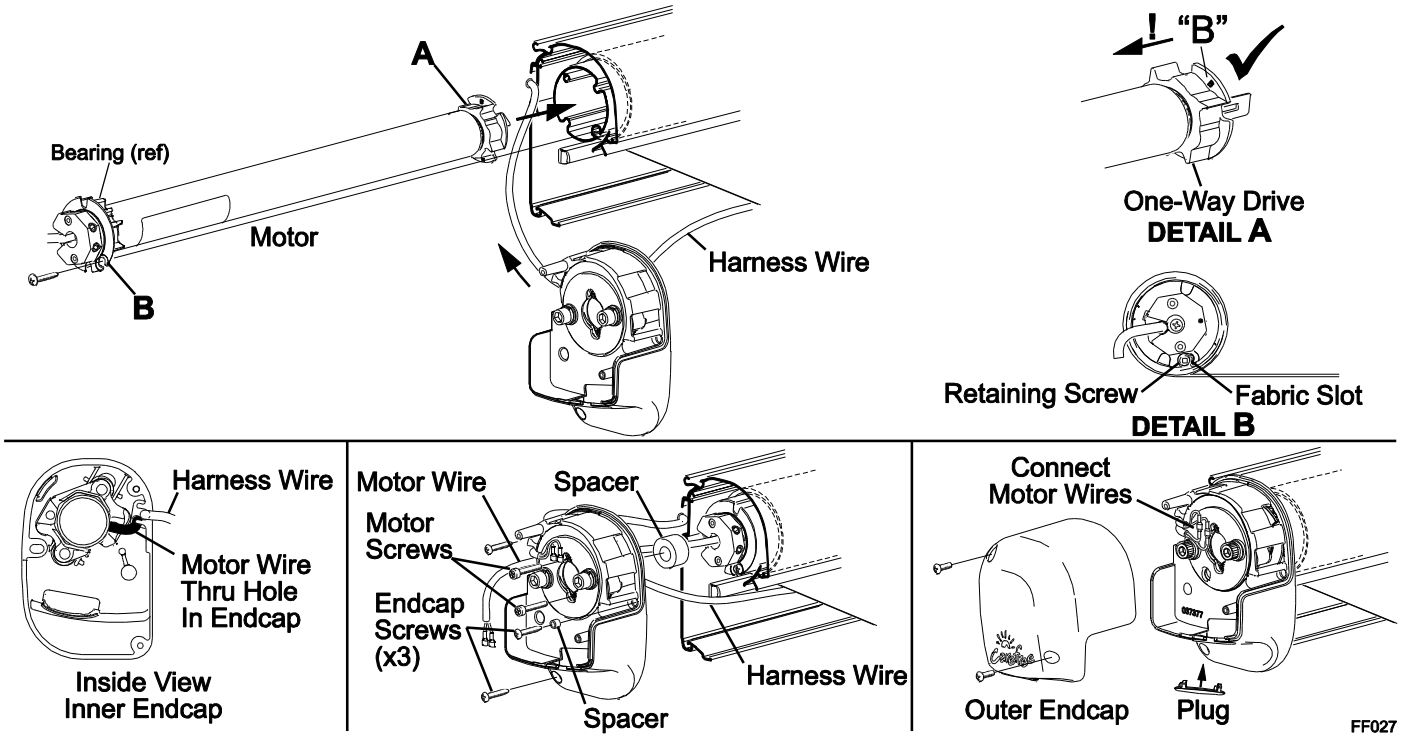

1. Check that the one-way drive is installed on the new motor assembly with the "B" pointing toward the motor.

   NOTICE **The one-way drive must be oriented with the "B" facing the motor. If the drive is not oriented correctly, the awning will not operate and the arms will spring out when released.**
2. Align the one-way drive with the roller tube and start sliding the new motor into the roller tube.
3. Align the bearing on the motor and slide into the roller tube.
4. Attach the fabric retaining screw through the bearing and in the fabric slot. The screw must be positioned to thread into the metal of the roller tube slot and the edge of the polycord. It may be necessary to rotate the roller tube to align the access hole and fabric slot.
5. Align the inner end cap with the roller tube and motor. Ensure that the large spacer is positioned in the inner endcap.
6. Route the motor wires and harness connectors through hole in the endcap.
7. Align the screw holes in the inner end cap with the motor and attach with the screws removed previously.
8. Align the screw holes in the inner end cap and attach to the awning case using three (3) M4 x 25 screws and 1 spacer in the front attach hole.
9. Attach the motor and harness wires, matching the wire colors (Blue to Blue and Brown to Brown). Fold and tuck the wires and connectors to fit inside the outer end cap.
10. Route the wire harness into the cable channels.
11. While holding the lead rail, carefully remove any roller tube supports and arm ties. Allow the lead rail to extend until the fabric is taut. If the lead rail continues to extend after the fabric is taut, the one way drive was installed backwards. Retie the arms, remove the motor and orient the one way drive as shown.
12. To test, restore power then extend and retract the awning.
13. After replacing the motor, it will be necessary to adjust the motor limits (page **Error! Bookmark not defined.**).
14. After testing and adjusting the motor limits, attach the outer end cap.

SETTING THE MOTOR LIMITS – AWNINGS PRODUCED PRIOR TO 10/1/2026

The motor limit switches are preset at the factory for best operation of the awning. The "OUT" limit switch is used to stop the motor when the awning is fully extended. The "IN" limit switch is used to stop the motor when the awning is fully retracted.

The limit switches are located inside the motor endcap.

To access the switches, remove the outer motor endcap and plug.

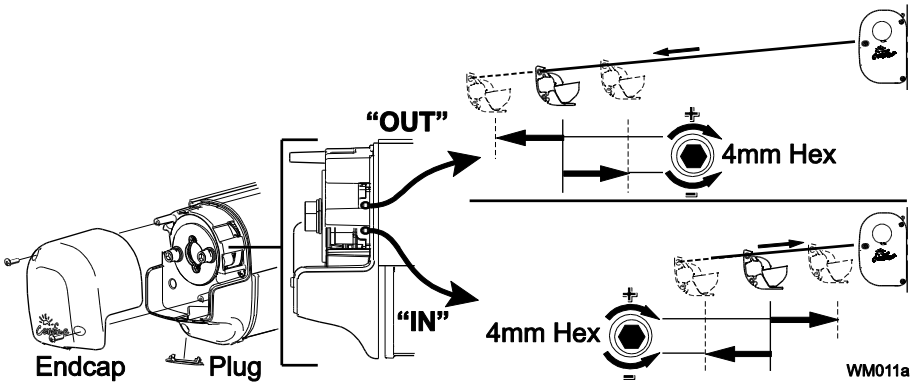

Out Limit Switch

1. Extend the awning out completely.
2. Confirm that the arms are fully extended. The motor should stop and the fabric should be tight. If the motor continues to run, the fabric will sag; or, if the motor quits before the arms are fully extended, it will be necessary to adjust the "OUT" limit switch.

   NOTE: It is best to make the adjustments in increments of a single turn. 3 full turns of the screw equals approximately 2" of fabric extension.
3. If the fabric sags:
   3.1. Retract the awning until the fabric is tight then retract an addition 10"-12".
   3.2. Using a 4mm Allen wrench turn the "OUT" limit switch COUNTERCLOCKWISE to reduce the time the motor runs.
   3.3. Extend to confirm that the adjustment is correct.
   3.4. Repeat the procedure until the awning extends correctly.
4. If the arms do not extend completely:
   4.1. Retract the awning approximately 10"-12".
   4.2. Using a 4mm Allen wrench turn the "OUT" limit switch CLOCKWISE to increase the time the motor runs.
   4.3. Extend to confirm that the adjustment is correct.
   4.4. Repeat the procedure until the awning extends correctly.

IN Limit Switch

NOTE: The "IN" limit switch is not adjusted when the Direct Response system is installed. The system electronics monitors the motor and shuts the motor off when the awning is fully retracted.

If the "IN" limit switch is accidently adjusted, the motor may shut off before the awning is fully closed. If this occurs, turn the "IN" adjustment screw clockwise. It is not necessary that the screw position matches the closed position. The Direct Response electronics controls the closed position.

ADJUSTING THE EXTEND LIMIT – AWNINGS PRODUCED AFTER 10/1/2026

The extend limit switch disables the extend function when the awning is fully extended. This prevents the awning from being overextended and can be adjusted so that the canopy is tight when the awning is fully extended. The switch is located on the arm knuckle closest to the motor (the left knuckle).

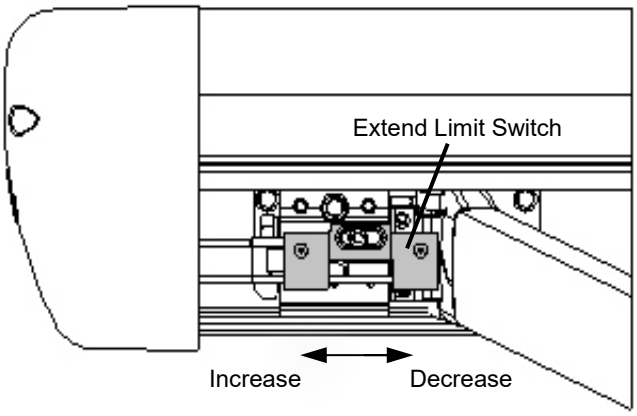

1. Open the awning to access the switch.
2. Loosen the screw.
3. Move the switch toward the arm to decrease the extension.
4. Move the switch away from the arm to increase the extension.
5. Tighten screw once position is set.

TROUBLESHOOTING AND DIAGNOSTICS

The following procedures are intended to aid the service technician to resolve operational issues with the electronics installation.

Common Operational Items

The following are operational items that may come up as questions during normal operation.

1. The awning seems to extend and retract slowly. The operational range is 20-25 seconds to extend or 25-35 seconds to retract. If the power supply is on the low side of the range (10V) the awning will move slower.
2. After a period of use, the arm knuckle joints may slide together slightly making a squeaking or squealing noise; this is normal and not a reason for concern. Refer to page 20.

In the charts below, YES is a positive response to the test; NO is a negative response.

D01	**THE AWNING DOES NOT EXTEND AND/OR RETRACT**		
A	Check Installation Integrity Use the wiring diagram and confirm that the components and wiring are properly installed and connected	YES	Go to test B
		NO	Correct as required
B	Confirm Power Supply Is vehicle battery or power source providing 10V to 14V to the Switch? **NOTE:** The battery may have a "surface charge" when not in use. This will give a false value if testing. Test the battery under load to receive a valid value.	YES	Go to test C
		NO	Correct as required
C	Test Motor Function 1. Remove the outer end cap on the motor side. 2. Disconnect the motor wires from the harness. 3. Connect the motor wires to a 12-14VDC power source (i.e. drill battery). If the awning does not move, reverse the leads on the battery and try again. **NOTICE** **Be sure to attach the MOTOR leads to the battery. Connecting the harness wires to the power source will seriously damage the Direct Response module.** 4. Does the motor run?	YES	Motor is good, go to test D
		NO	Motor is defective - replace
D	Test wire continuity in the harness 1. There are two wires from the module to the motor connection. 2. There are four wires from the module to the switches. 3. There is one wire to chassis ground. 4. Confirm the wires are isolated and not shorted against the vehicle or each other	YES	Wire continuity good – reconnect the wires disconnected in the previous test then go to test E
		NO	Repair as required then reconnect the wires
E	Test Switch Function 1. Test Power Switch 1.1. Disconnect wires from Power Switch. 1.2. Using a continuity tester place one lead on each terminal. 1.3. With the switch in the OFF position, circuit should be open. 1.4. With the switch in the ON position, circuit should be closed. 2. Test the Extend/Retract Switch 2.1. Using a continuity tester, place one lead on center pin. Place the second lead on bottom pin. Put the switch in the center position and measure the continuity. Circuit should be open. 2.2. Press the switch down (Extend). Circuit should be open. 2.3. Press the switch up (Retract). Circuit should be closed. 2.4. Move the second lead to the top pin. Put the switch in the center position and measure. Circuit should be open. 2.5. Press the switch down (Extend). Circuit should be closed. 2.6. Press the switch up (Retract). Circuit should be open	YES	Switches are good. Module is defective - replace
		NO	Switches are defective - replace

D02 LEAD RAIL DOES NOT CLOSE CORRECTLY

A	Does lead rail close parallel to the case?	YES	Go to test B
		NO	Correct the pitch setting so arms are even. Refer to page 8.
B	Does lead rail stop before reaching case?		
	1. Is the fabric rolling onto the roller tube correctly? The fabric must roll onto the roller tube from the bottom.	YES	Go to test B2
		NO	Using the close position of the switch, overextend the awning until the fabric rolls under the roller tube. Check the motor "out" limit switch (page **Error! Bookmark not defined.**) so that the motor stops when the fabric is extended and still wrapped beneath the roller tube
	2. Is the motor stopping before the awning is closed?	YES	If the "in" motor limit switch is not correct, the lead rail can stop before reaching the case. Refer to page **Error! Bookmark not defined.**
		NO	Go to test C
C	Is the arm lead rail connector in the wrong position		
	1. Do the arm elbows strike the case before the awning is closed?	YES	The lead rail connectors are set to far from the end of the lead rail. Loosen the screw and slide the connector toward the end of the lead rail. Make sure both sides are even. Make adjustments in small increments and retest.
	2. Do the arm elbows strike the lead rail before the awning is closed?	YES	The lead rail connectors are set to close to the end of the lead rail. Loosen the screw and slide the connector away from the end of the lead rail. Make sure both sides are even. Make adjustments in small increments and retest.

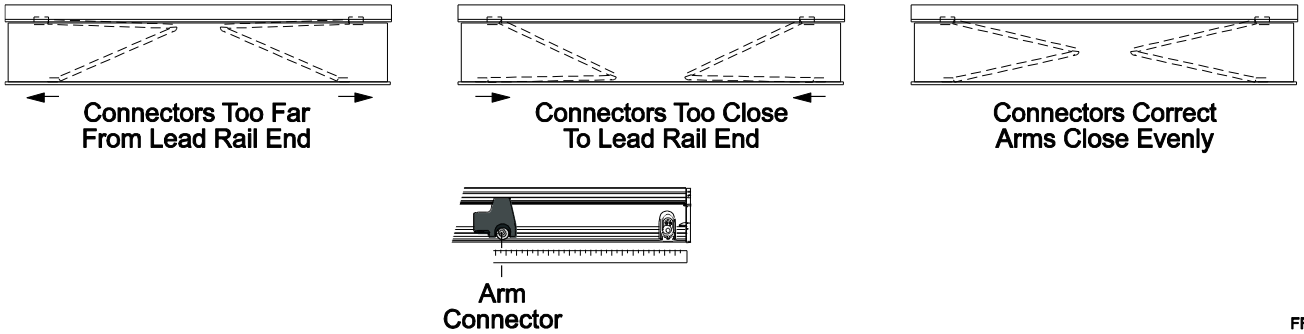

ELECTRICAL

WIRING SCHEMATIC

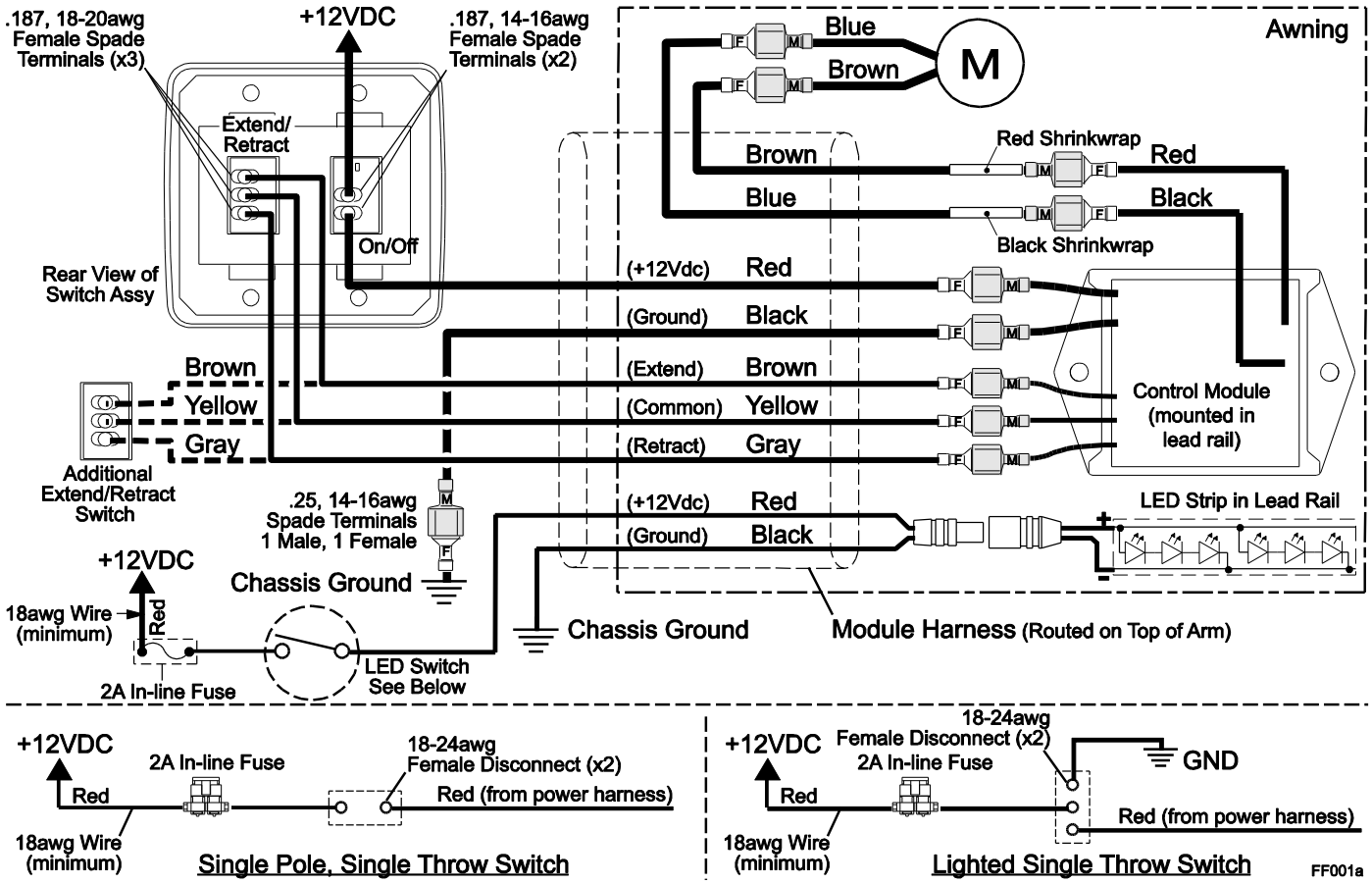

REPLACING THE DIRECT RESPONSE MODULE

The Direct Response Module is located on the LH side (motor side) of the lead rail.

NOTE: The Freestyle awning will not operate electrically when the module is disconnected.

To Remove:

1. Disconnect power to the awning.
2. Remove the two screws holding the module. Pull the module from the lead rail.

   NOTE: The mounting brackets are held in place by tension from the screws. When the screws are removed, the bracket will sit loosely in the lead rail. Use care save the brackets.
3. Detach the quick release connectors.
4. Set the module aside.

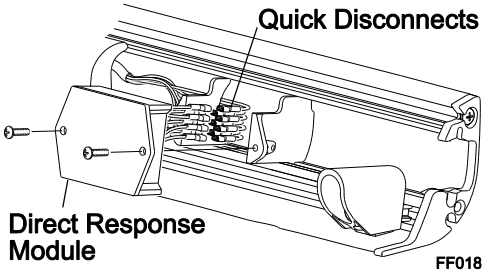

To Install:

1. Connect the wires. Make sure to match wire color and size when making connections.
2. Position the bracket.
3. Tuck the wires and connectors behind the module and attach the module with the two screws removed previously.

STANDARD MAINTENANCE

Maintaining a Carefree Awning is easy. Just follow these basic steps:

- Always operate the awning according to the instructions.
- Periodically check that the fasteners are tight. Tighten if necessary.
- Keep the awning fabric and arms clean.

FABRIC CARE

NOTICE **Do not use oil based cleaners or any caustic, granulated, or abrasive type cleaners on your Carefree product.**

1. One of the best ways to keep the fabric looking good and to delay the need for deep or vigorous cleanings is to hose fabrics off on a monthly basis with clear water. This practice will help prevent dirt from becoming deeply imbedded in the fabric. In most environments, a thorough cleaning will be needed every two to three years.
2. When it is time for a thorough cleaning, the fabric can be cleaned while still on the awning frame.
   - For Vinyl Fabric – Use a soft brush and warm water with soap.
   - For Acrylic Fabric – Use a stiff brush and warm water with soap.
3. When cleaning the fabric, it is important to observe the following:
   - Always use a natural soap, never detergent.
   - Water should be cold to lukewarm, never more than 100°F.
   - Air-dry only. Never apply heat to the fabric.
   - Always allow the fabric to dry thoroughly before rolling up the awning.

Mildew

Mildew is a fungus growth that looks like dirt. Vinyl coated polyester fabrics are mildew resistant because of a chemical biocide in the vinyl coating. Under ordinary conditions, mildew will not appear. However, in areas where high temperature and humidity are common, mildew can be a problem and require the material to be washed more frequently.

Pooling

When water collects on the top of the fabric, this is known as "pooling". This can occur during inclement weather or if a running air conditioner discharges over the awning. The water is dumped when the awning is retracted. It is recommended that if water accumulates; retract the awning in steps (8"-12") to dump the water. This will help prevent the fabric from stretching or distorting.

Leaking

On vinyl canopies, side hems and poly cords are stitched in with a sewing machine. On occasion, this stitching may allow water to seep or leak through the stitches. This is normal and not a defect covered by warranty. Treat the seams with a quality seam sealer.

MOTOR MAINTENANCE

- Check all wiring and connections for wear. Repair when needed.
- Check that the sealant is providing a good seal and no water is accumulating on the wiring.

ARM NOISE

After a period of use, the arm knuckle joints may slide together slightly making a squeaking or squealing noise; this is normal and not a reason for concern. To reduce the sound, apply a few drops of multi-purpose oil (3-IN-1® [1] or equivalent) on the knuckle joint seams. Operate the awning and repeat 3-4 times to allow the oil to penetrate into the joint.

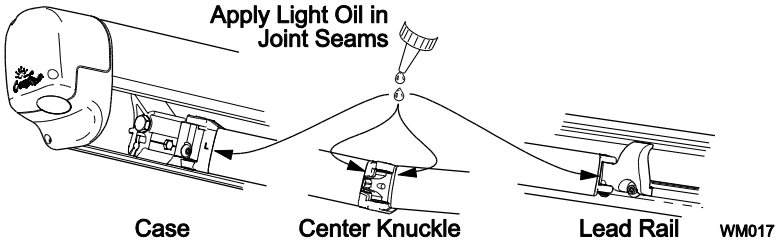

MANUAL OVERRIDE

If power to the vehicle is not available, the awning can be safely retracted using the manual override located on the idler (right) end of the case.

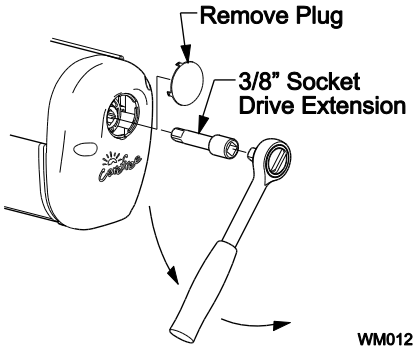

NOTE: This procedure cannot be used to extend the awning.

1. Remove the plug from the right end cap and save.
2. Insert a 3/8" socket drive extension and handle into the square drive hole inside the end cap.
3. Turn the handle counterclockwise until the awning is retracted.
4. Replace the plug.

NOTICE **After closing the awning with the manual override, the lead rail may move out from the case 1/4" -1/2". This is normal and the awning is secure for travel until power is restored or repairs are completed. Do not attempt to force the lead rail in with the override, serious damage can occur to the awning.**

[1] 3-IN-1® is a registered trademark of the WD-40 company.

PART NUMBER LISTING

SERIAL NUMBER/PART NUMBER LOCATION

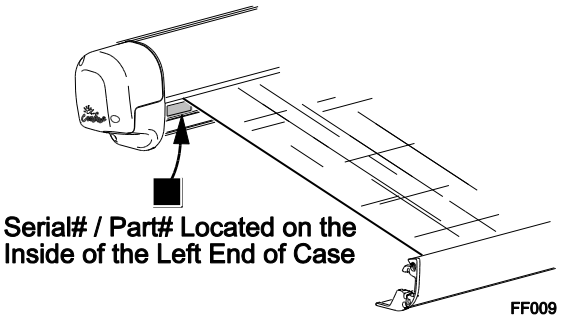

FREEDOM FREESTYLE WM ILLUSTRATED PARTS LIST

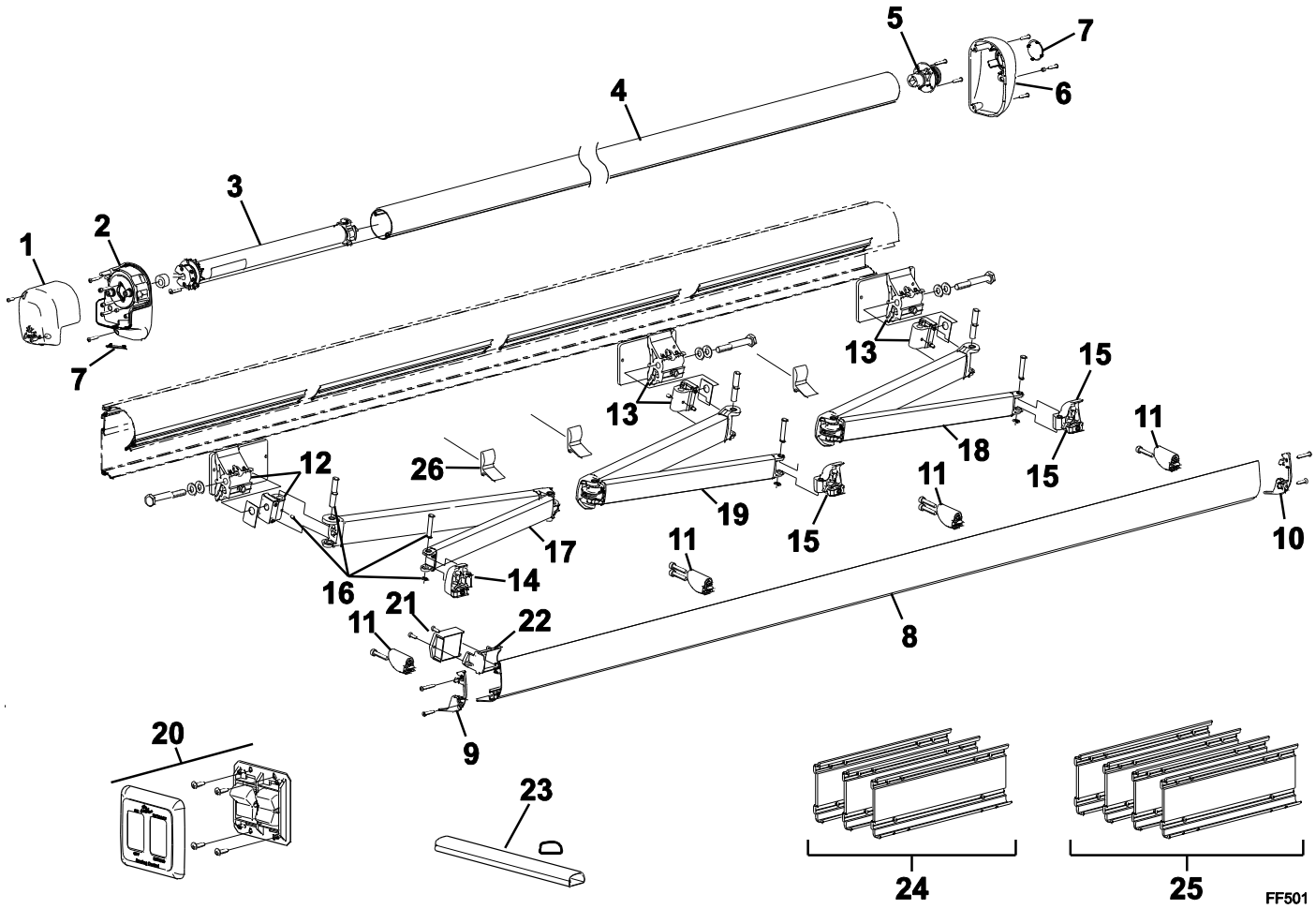

Item	*Part Number*	*Description*			*Notes*
1	R001618XXX	Endcap, LH, Outer			1
2	R001861XXX	Endcap, LH, Inner			
3	R001862	Motor Assy, LH			2
4	610900-xxx.xx	Roller Tube			
5	R001623	Roller Tube Endplug, RH			
6	R001620XXX	Endcap, RH			1
7	R040792-005	Plug, White			
	R040792-006	Plug, Black			
8	R001811X-aa-xxx	Lead Rail			6
9	R001624XXX	End Plate, Lead Rail, LH			1
10	R001625XXX	End Plate, Lead Rail, RH			1
11	R001621	Ramp Kit, Leadrail			
12	R001865	Case Connector, LH			3
13	R001864	Case Connector, RH			
14	R001678	Pivot Assy, Lead Rail, LH			3
15	R001680	Pivot Assy, Lead Rail, RH			3
16	R001630	Hardware Pack, Arm Attach, 1 Arm			
17a	R012530-TB68L	Spring Arm, LH	2.44 Meter		3
17b	R012530-TB76L	Spring Arm, LH	2.57 Meter	used thru 05/2017	3,7
17c	R012530-TB79L	Spring Arm, LH	2.57 Meter	used 06/2017 & ON	3,7
17d	R012530-TB94L	Spring Arm, LH	3 Meter & Longer		3,7
18a	R012530-TB68R	Spring Arm, RH	2.44 Meter		3
18b	R012530-TB76R	Spring Arm, RH	2.57 Meter	used thru 05/2017	3,7
18c	R012530-TB79R	Spring Arm, RH	2.57 Meter	used 06/2017 & ON	3,7
18d	R012530-TB94R	Spring Arm, RH	3 Meter & Longer		3,7
19a	R012530-TB94M	Spring Arm, Center	4.5 and 5 meter only		3,5,7
19b	R012530-TB76M	Spring Arm, Center	4m DX Style Only	used thru 05/2017	3,5,7
19c	R012530-TB79M	Spring Arm, Center	4m DX Style Only	used 06/2017 & ON	3,5,7
20	R019468-006	Switch Kit			
21	R060686-004	Sensor/Control Module			
22	R001679	Bracket Kit, Sensor			
23	R040616-206	Cable Channel		43"	
24	R019867-001	Bracket Kit, 3m-4m			4
25	R019867-002	Bracket Kit, 4.5m-5m			4
26	R001969	Arm Bumper		qty: 1	
27a	019868-001	Screw Pack, Awning Mount, 3m-4m		Not Shown	
27b	019868-002	Screw Pack, Awning Mount, 4.5m-5m		Not Shown	
28	R060701-003	Harness, Sensor		Not Shown	
	R060701-004	Harness, Sensor, used w/ 8' only		Not Shown	

NOTES

1. XXX = Color; WHT = White; BLK = Black; GRY = Satin
2. Motor assembly (item 3) includes motor, , bearing and one-way drive. Parts not available separately.
3. Attaching hardware not included with spring arm assemblies. Order item 16.
4. Bracket kit 3m-4m contains 3 brackets and screws. Bracket Kit for 4.5m-5m contains 4 brackets. Bracket kits do not include awning mounting screws; order item 25.
5. The middle spring arm is different than the outer arms. Center arms can be identified by the blue dot located on or near the case connector of the arm. Do not use center arms for replacing outer arms, do not use outer arms to replace the center arm.
6. For Item 8 (lead rail): X= Color; B=Black; W=White; S=Satin. aa = LED; LI= w/ LED Inside; XX=No LED. xxx= product order length.
7. Style code DX (4m length) uses 3 arms:
   items 17b, 18b, 19b thru 05/2017;
   items 17c, 18c, 19c 06/2017 & ON.
8. Harness (item 27) includes integrated LED harness.

For LED replacement parts and service procedures refer to 070013-301 "LED Service Manual for Box Awnings" available on-line at www.carefreeofcolorado.com