Installation Manual

Freestyle WM

Product style codes: QX, CA, DX

RV

12V Motorized Lateral Arm Box Awning, Legless

Read this manual before installing or using this product. Failure to follow the instructions and safety precautions in this manual can result in personal injury and/or cause the product to not operate properly.

Table of Contents

Product Overview **1**
- Component Check list 2

Installation **3**
- Attaching the Mounting Plates 3
- Mounting the Awning 4
- Securing the Awning 5
  - Jumping the Motor (When Direct Response is Installed) 5
  - Jumping the Motor (without Direct Response) 5

Switch Installation **6**
- Wiring Diagram - LCDR 7

Optional LED Lighting **8**
- Switch Installation 8

Pitch Adjustment **9**

Manual Override **9**

Setting the Motor Limits – Awnings produced prior to 10/1/2026 ..... **10**

Out Limit Switch 10
IN Limit Switch 10

Adjusting the Extend Limit – Awnings produced after 10/1/2026 11

Proprietary Statement

The Freestyle WM Awning is a product of Carefree of Colorado, located in Broomfield, Colorado, USA. The information contained in or disclosed in this document is considered proprietary to Carefree of Colorado. Every effort has been made to ensure that the information presented in the document is accurate and complete. However, Carefree of Colorado assumes no liability for errors or for any damages that result from the use of this document.

The information contained in this manual pertains to the current configuration of the models listed on the title page. Earlier model configurations may differ from the information given. Carefree of Colorado reserves the right to cancel, change, alter or add any parts and assemblies, described in this manual, without prior notice.

Carefree of Colorado agrees to allow the reproduction of this document for use with Carefree of Colorado products only. Any other reproduction or translation of this document in whole or part is strictly prohibited without prior written approval from Carefree of Colorado.

Safety Information

⚠	**This is the safety alert symbol. It is used to alert individuals to potential personal injury hazards. Obey all safety messages that follow this symbol to avoid possible personal injury or death.**
WARNING	**Indicates a hazardous situation, which if not avoided, could result in death or serious bodily injury.**
CAUTION	**Indicates a hazardous situation, which if not avoided, may result in minor or moderate bodily injury.**
NOTICE	**Indicates a situation that may result in equipment-related damage.**

General Safety:

WARNING This product can expose you to chemicals including Di-isodecyl phthalate (DIDP), Vinyl Chloride and Formaldehyde, which are known to the state of California to cause cancer or birth defects or other reproductive harm. For more information visit www.P65warnings.ca.gov

WARNING Shock Hazard. Always disconnect battery or power source before working on or around the electrical system.

WARNING Always wear appropriate safety equipment (i.e. goggles).

CAUTION Always use appropriate lifting devices and/or helpers when lifting or holding heavy objects.

NOTICE When using fasteners, do not over tighten. Soft materials such as fiberglass and aluminum can be "stripped out" and lose the ability to grip and hold.

PRODUCT OVERVIEW

The Freedom Freestyle WM Awning is a state of the art lateral arm awning. When retracted, the housing provides protection against the elements while the streamlined styling blends in with the coach sidewall. The full tension canopy fabric allows the awning to be partially or fully extended for best shade coverage.

Each unit is equipped with lateral support arms. No vertical arms interfere with coach sidewalls, custom graphics or equipment that may be mounted on the sidewalls.

Freedom Awning Specifications:

- Fully retractable and self storing;
- The sealed awning motor operates on standard 12VDC (range 10VDC to 14VDC);
- Case and frame are constructed of high-strength aluminum extrusions, protected with a polyester paint finish;
- Stainless steel fasteners and hardware.
- Direct Response is standard.

SPECIFICATIONS

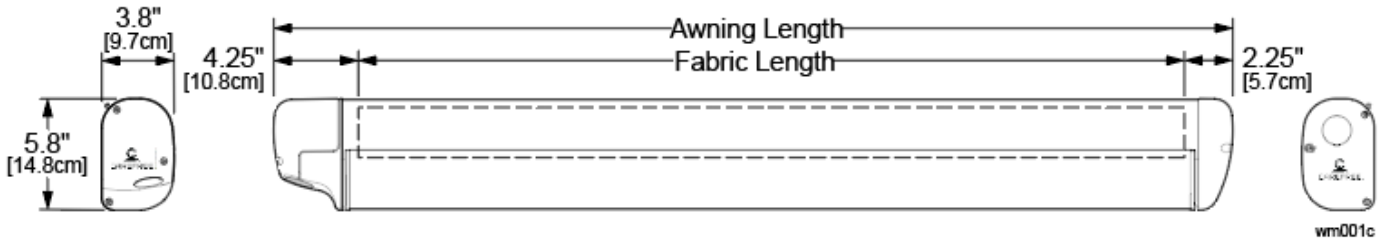

WIDTHS:	inches	96	101	118	138	157	177	197
	centimeters	244	257	300	350	400	450	500
EXTENSION:		72" (175cm)	80" (200cm)	98" (250cm) note				
		NOTE: Style Code DX (4m length) uses 3 arms with a shorter extension of 80"						
LEAD RAIL SUPPORT:		4m or less: 2 Lateral Spring Arms; 4.5 & 5m: 3 Lateral Spring Arms						
POSITION CONTROL:		12V Motorized w/ tubular motor						
		Standard: 12V Direct Response						
		Optional: BT12 Wireless Awning Control System						

MOTOR SPECIFICATIONS			
Motor Type:	Tubular		
Power:	12VDC	*Minimum:* 10VDC	*Output:* 30 Watts
	Nominal Current: 2.5Amps		*Max Current:* 14Amps (stall @ min voltage)
Torque:	*Continuous:* 6Nm/4.5 ft-lbs.		*Stall:* 32Nm/23.6 ft-lbs.
Speed:	24 rpm		
COLORS AVAILABLE			
Case:	Satin, White or Black	*Minimum:* 10VDC	*Output:* 30 Watts
Fabric:	Vinyl, Acrylic		*Max Current:* 14Amps (stall @ min voltage)

COMPONENT CHECK LIST

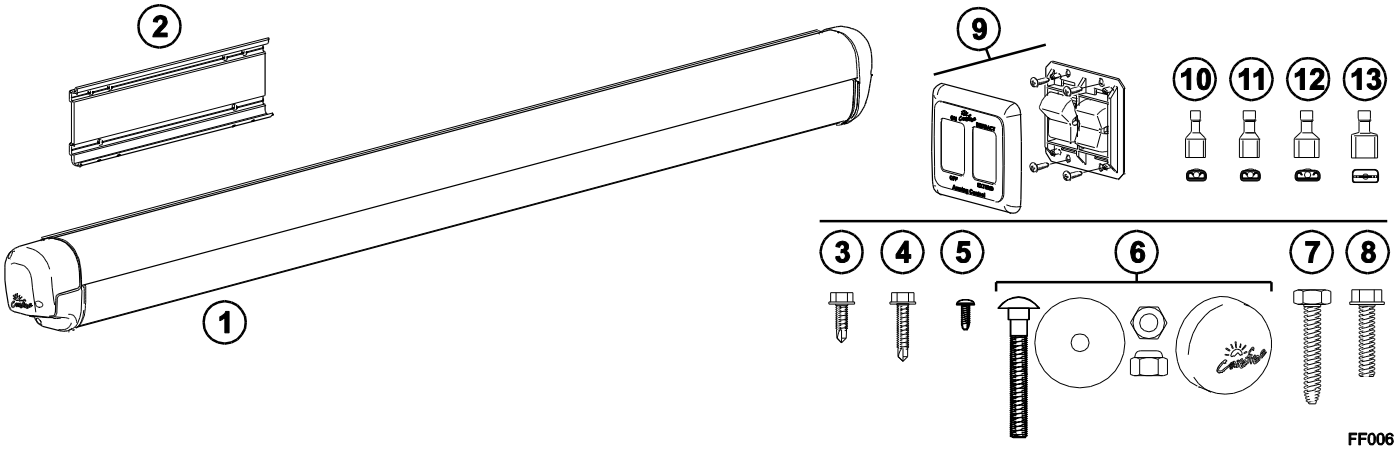

✓	ITEM	DESCRIPTION		QTY	NOTE
❑	1	Awning Assembly		1	1
❑	2	Mounting Plate	40cm	NOTE	2
❑	3	Screw, Self Drilling	#10 x 3/4"	NOTE	3
❑	4	Screw, Self Drilling	#10 x 1"	NOTE	3
❑	5	Screw, Self Drilling, Hex Head	#6 x 3/8"	NOTE	3
❑	6	Bolt thru hardware	M6 x 60mm	NOTE	4,6
❑	7	Lag screw	1/4" x 1.5"	6	5,6
❑	8	Screw, Thread Cutting	1/4-20 x 3/4"	6	5,6
❑	9	Switch Kit		1	7
❑	10	Terminal, Female, .187	18-22 awg	3	7
❑	11	Terminal, Female, .187	14-16 awg	2	7
❑	12	Terminal, Female, .25	14-16 awg	1	7
❑	13	Terminal, Male, .25	14-16 awg	1	7

NOTES:
1. Product configuration is specified at time of order, including length, fabric, color etc. Check assembly against original purchase order.
2. 4 meter and less uses a quantity of 3 plates; 4.5m and 5m uses a quantity of 4.
3. Screw (item 3) quantity is 2 per lateral spring arm. Screw (item 4) quantity is 1 per lateral spring arm. Screw (item 5) is quantity 2 per mounting plate (reference note 2). Screws are included with mounting plates.
4. Bolt thru hardware (item 6) includes M6 x 60 carriage bolt, fender washer, nylock nut and bolt cover. Quantity is 6 each per mounting plate (reference note 2).
5. Quantities included in screw pack for items 7 and 8 are for one mounting plate only.
6. Screw packs include items 6 thru 8. Packs are ordered separately.
7. Items 9 through 13 are used with the Direct Response system. Switches are included with the BT12 Wireless Awning Control System kit when ordered.

INSTALLATION

For structural and operation integrity, the Freedom Freestyle WM awning must be mounted with the included mounting plates and cannot be mounted using an awning rail.

Prior to mounting the awning, ensure that the awning will not interfere with light fixtures, exhaust vents, openings, etc.

ATTACHING THE MOUNTING PLATES

1. Determine the optimum positioning of the awning.
   1. The centerline of the awning fabric is offset from the centerline of the awning assembly. To align the center of the fabric, use the backplate of the awning assembly for measurements.
   2. The bottom of the mounting plates should be 28cm [11"] above any openings or frames to avoid interference when the awning is installed.

      NOTE: Height is based on clearance over a 76cm [30"] door extension. The mounting height will vary 1.9cm [.75"] for every 5cm [2"] change in extension. For longer door extensions, add the calculated difference. For shorter extensions, subtract the difference.

      Dimensions are based on the steepest pitch. The height can be reduced by reducing the pitch, minimum acceptable pitch is 10 degrees from horizontal.
   3. Measure each end of the awning position from the ground so that the awning is mounted parallel to the ground.

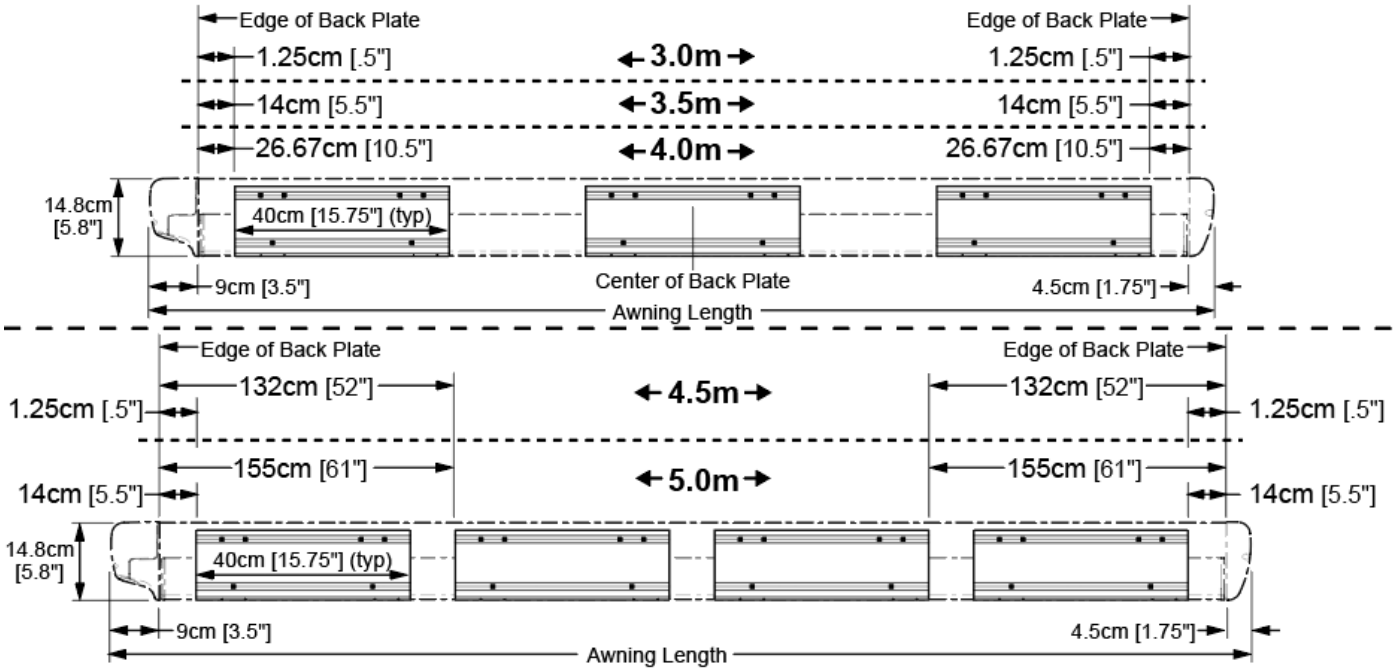

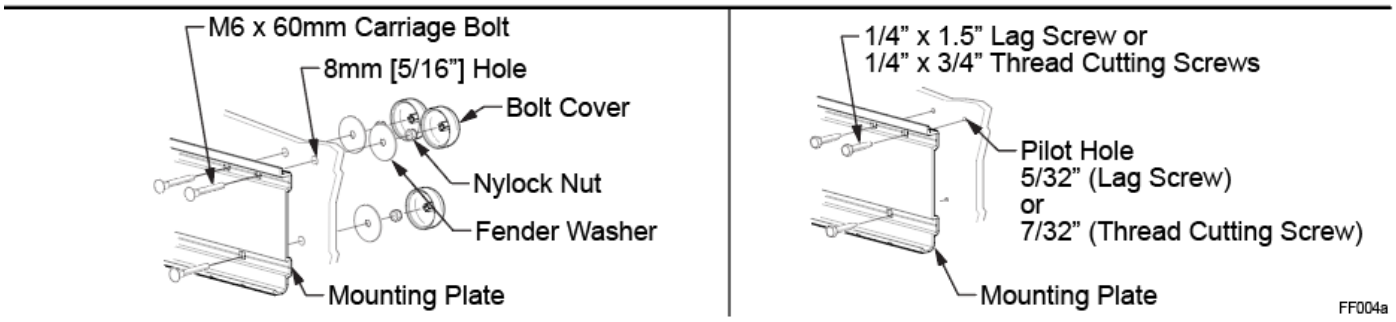

4. Mark the position with a chalk line.
5. Determine the correct plate pattern then use the plates as a template.

   NOTE: The brackets can be mounted using the bolt through hardware or with lag screws or thread cutting screws.

6. For bolt through:
   6.1. Using the plates as a template, drill 8mm [5/16"] holes through the vehicle wall to match the plates.
   6.2. Attach the plates using M6 x 60mm carriage bolts, fender washers, nylock nuts and bolt covers (6 per plate).
7. For lag screws or thread cutting screws:

   Two optional screw types are furnished. The lag screws can be used for mounting into wood or aluminum frames. The thread cutter screws can be used when attaching into steel plate.

   7.1. Using the plates as a template, drill 5/32" pilot holes for lag screws or 7/32" pilot holes for the thread cutter screws. Use care to not drill through the wall.
   7.2. Attach the plates (6 screws per plate).
8. Use the dimensions shown to locate the routing hole for the motor cable.

   NOTES: The hole location can be located in the areas shown to avoid interior framing, cabinets and electrical components that could be damaged or interfere with the hole location.

   Ensure that the awning cable is accessible after routing.

   The cable extends from the awning 72" - 89" depending on the awning configuration. If the final routing to the switch location is greater than the supplied wire, the installer must splice additional wire to the awning cable. Ensure that the new wire matches the gauge of the existing wire.

   Wire and splices must be furnished by the installer.

   This is a preliminary step, the wire and switch installation are completed after the awning is mounted.

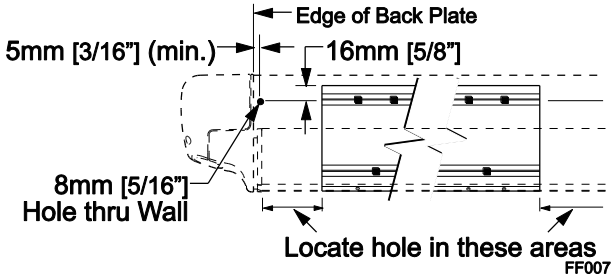

9. Drill an 5/16" [8mm] hole through the outer vehicle wall.

MOUNTING THE AWNING

1. Set the awning into the hooks of the mounting plates.

   Route the awning cable through the hole drilled previously while lifting the awning into position.

   Tip: If the wire is routed along the back of the case, use small pieces of tape to hold the wire in place while lifting the awning.

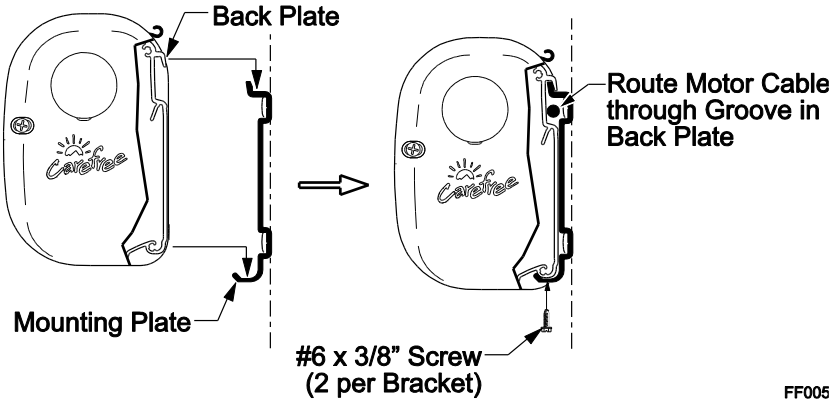

2. Adjust the position of the awning horizontally as required.
3. Firmly hold the awning in the brackets and attach the awning case to the brackets using two (2) #6 x 3/8" screws through the bottom of each bracket into the awning case.

SECURING THE AWNING

The awning must be secured as described below. This step can be done after the wiring is completed and the awning can be opened using the switch or the awning can be opened using the procedure below "Jumping the Motor".

NOTICE **For proper awning operation and structural integrity, the awning must be secured as described. Failure to secure the awning may result in damage to the awning and vehicle and void the warranty.**

1. Open the awning.
2. Remove power from awning.
3. Through the flat plate of each case knuckle, use two (2) #10 x 3/4" self-drilling screws and one (1) #10 x 1" self-drilling screw to attach the awning to the mounting brackets.

NOTE: For 4 meter and smaller awnings, there are two (2) arm case knuckles. For 4.5 and 5 meter awnings there are three (3) arm case knuckles.

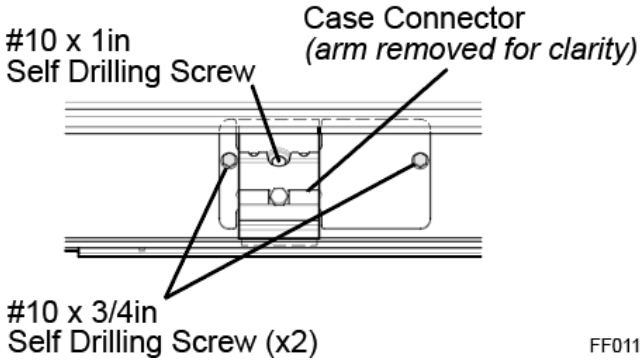

4. Return power to awning if wiring has already been completed.

Jumping the Motor (When Direct Response is Installed)

If it is necessary to open the awning before the switch and wiring are complete, it is possible to jump the motor to open the awning.

1. Separate the wires at the end of the harness cable.
2. Attach the RED wire to the positive terminal of a 12-14V battery.
3. Attach the BLACK wire to the negative terminal of the battery.

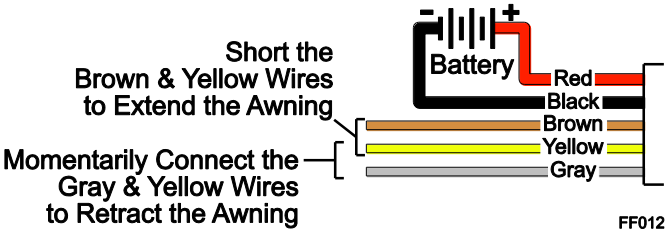

NOTE: The awning circuitry includes "Reverse Polarity Protection" if the battery connections are accidently reversed the awning electronics will not be damaged. If the wires are reversed, remove from the battery and reconnect in the correct order.

4. To extend the awning: Short and hold the BROWN and YELLOW wires together until the awning is open.
5. To retract the awning: Momentarily connect the GRAY and YELLOW wires together until the awning is closed.

Jumping the Motor (without Direct Response)

This method is used if the BT12 Wireless Awning Control System is to be used.

To open the awning before the switch and wiring are complete, it is possible to jump the motor to open the awning.

1. Temporarily connect the ends of the motor wires to a 12V-14V source (i.e. drill battery). If the awning does not begin to move, reverse the leads.
2. Remove the battery after the awning is open.

If installing the BT12 Wireless Awning Control System use the wiring and setup instructions in "070029-001 BT12 Installation Manual".
Manual is available on-line at www.carefreeofcolorado.com/carefreeconnects.

SWITCH INSTALLATION

WARNING Shock Hazard. Always disconnect battery or power source before working on or around the electrical system.

NOTICE To comply with 2018 NFPA 1192 RV Standard, Section 6.4.7, switches must be mounted as follows:

For travel trailers and 5th wheels:

a) Installed in a dedicated switch cabinet with a latching door; or,

b) Installed with the optional covered bezel available from Carefree; or,

c) Installed in a cabinet with a latching door where the switch is protected and CANNOT be activated by any items or cargo that may move or shift during transit; or,

d) Installed with an interrupt circuit that disables awning extension when the vehicle is in motion (i.e. a relay tied into the parking brake or ignition that disconnects the BROWN extend wire or the RED power wire).

For motorized coaches (Class A, Class B or Class C):

a) Installed with an interrupt circuit that disables awning extension when the vehicle is in motion (i.e. a relay tied into the parking brake or ignition that disconnects the BROWN extend wire or the RED power wire).

NOTE: Many Carefree controllers have mobile apps, and the ignition lock must disable the mobile apps as well.

2026 NFPA 1192 RV Standard, Section 6.6.1 has additional requirements:

6.6.1.1 – Motorized RVs shall have the extension of protruding components automatically disabled while the vehicle is in transit
6.6.1.2 – Towable RVs shall have the extension of protruding components that are controlled by means of an electrical switch or controller incapable of unintentional activation while the vehicle is in transit

1. Determine the location for the switch.
   1.1. There is 70" [180cm] of wire from the motor location. If the final routing to the switch location is greater than supplied cable, the installer must splice wire extensions to the cable wires.
      1.1.1. For the motor wires use 16awg wire
      1.1.2. For the switch wires use 20awg wire.
      1.1.3. Wire and splices are furnished by the installer.
   1.2. Location should provide the operator a view of the awning during operation.
2. At the switch location cut a 2-5/16" [5.9cm) x 1-1/2" [3.8cm] hole.
3. Route the cable from the awning through the hole.
4. Terminate the three (3) 22awg wires (Brown, Yellow, Gray) with .187, 18-22 awg female terminals. Attach to the EXTEND/RETRACT switch as shown in the wiring diagram.
5. Terminate the RED wire from the cable with a .187, 14-16 awg female terminal. Attach to one terminal of the ON/OFF switch.
6. Terminate the BLACK wire from the cable with a .25, 14-16 awg male terminal.
7. Run a minimum 14 awg wire to chassis ground. Suitable ground would be the vehicle chassis or conductive structure connected to the chassis. Terminate the wire with .25, 14-16 awg female terminal.

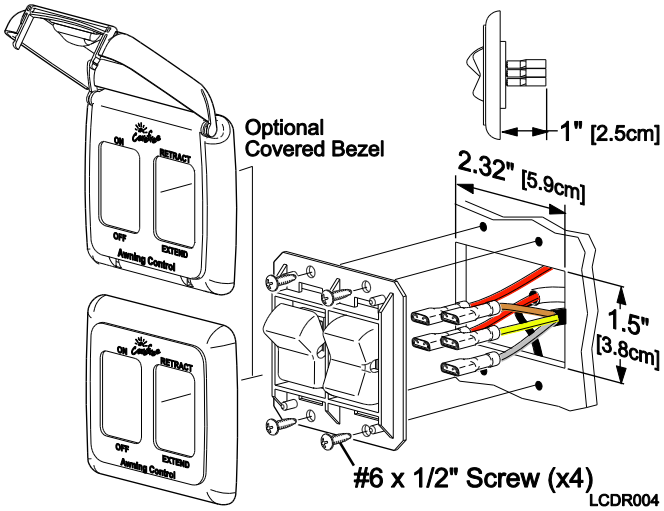

8. Connect the ground wire to the black wire from the cable.
9. Run a minimum 14 awg wire from the power distribution panel (auxiliary battery circuit) or equivalent. The circuit should be protected by a 15-amp fuse. Terminate the wire with a .187, 14-16 awg female terminal. Attach to one terminal of the ON/OFF switch.

   NOTE: If the wire run is 30 feet or longer, use 12awg wire to prevent voltage drop. Use the appropriate wire terminals for the wire size.
10. Push the wires and switches into the hole then attach the switch frame using four (4) #6 x 1/2" screws.
11. Snap the switch bezel over the switch frame.

WIRING DIAGRAM - LCDR

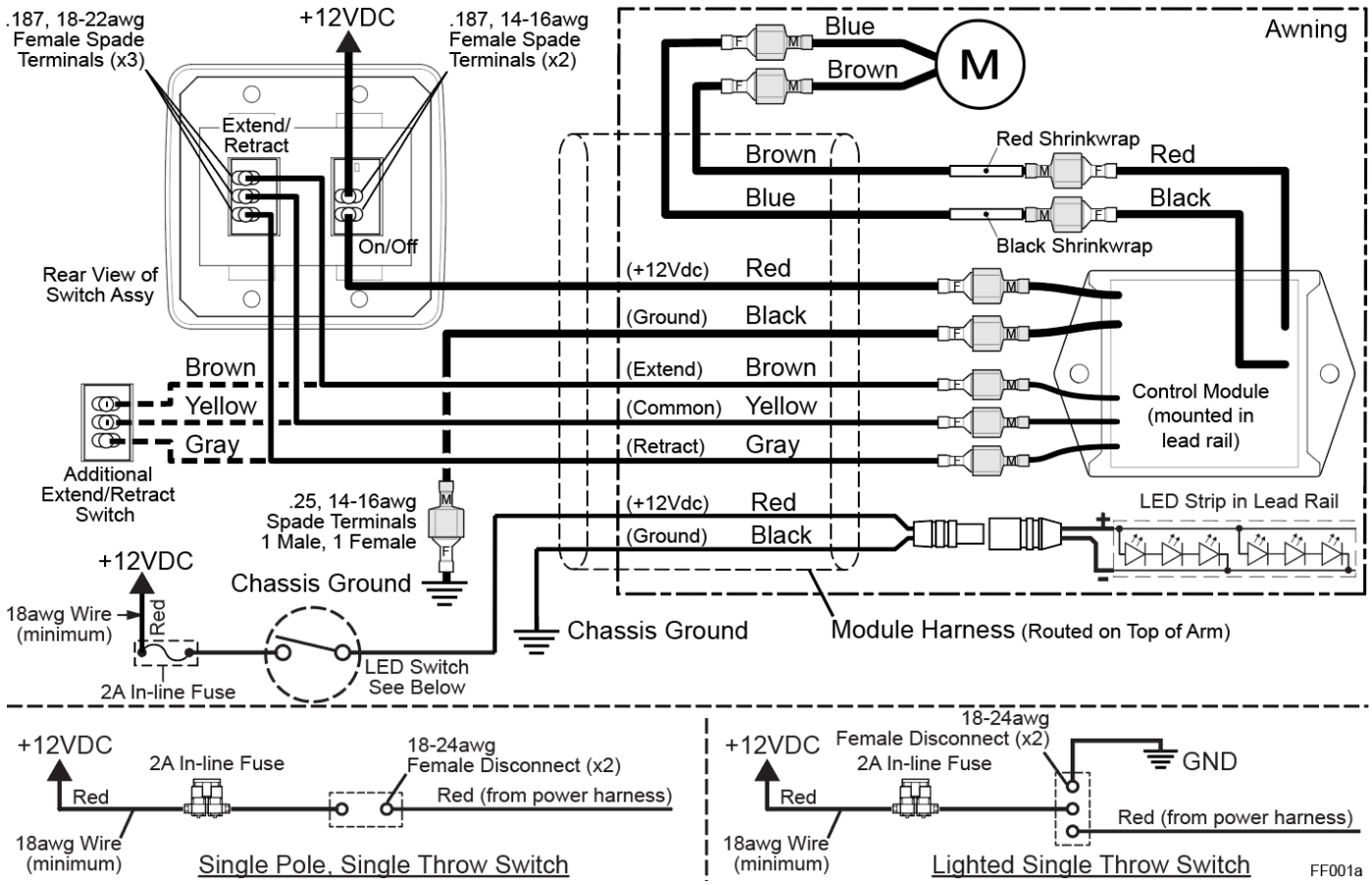

For units produced after 10/1/2026, the awning uses an external limit switch. The color of the wires are as follows:

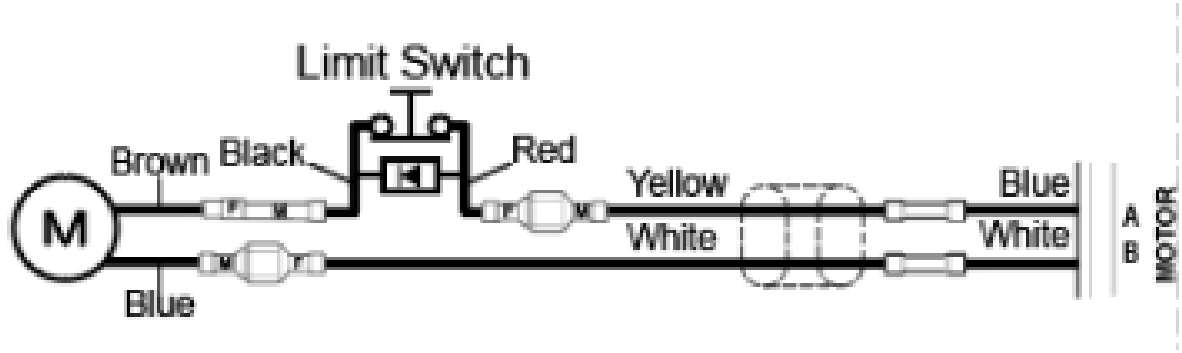

OPTIONAL LED LIGHTING

Optional LED lighting may be mounted in the lead rail. The wiring runs along the top of the arm.

The LED wire harness is incorporated as part of the sensor harness.

NOTICE **The following information must be followed to avoid damage to the wiring during and after installation.**

a) The wire should be secured to the wall of the vehicle where it is exposed on the outside of the vehicle. Use a quality silicone sealant/adhesive.

b) Do not route the wire over sharp edges or heat sources that can damage the wires or wire insulation.

c) Damage that is a result of improper routing may void warranty.

SWITCH INSTALLATION

NOTE: Installers may choose to furnish the control switch. The installation requires that the power line (+12VDC) be attached to a dedicated 2A circuit breaker or a 2A in-line fuse must be installed between the switch and power source. For easy access, locate the fuse close to the switch.

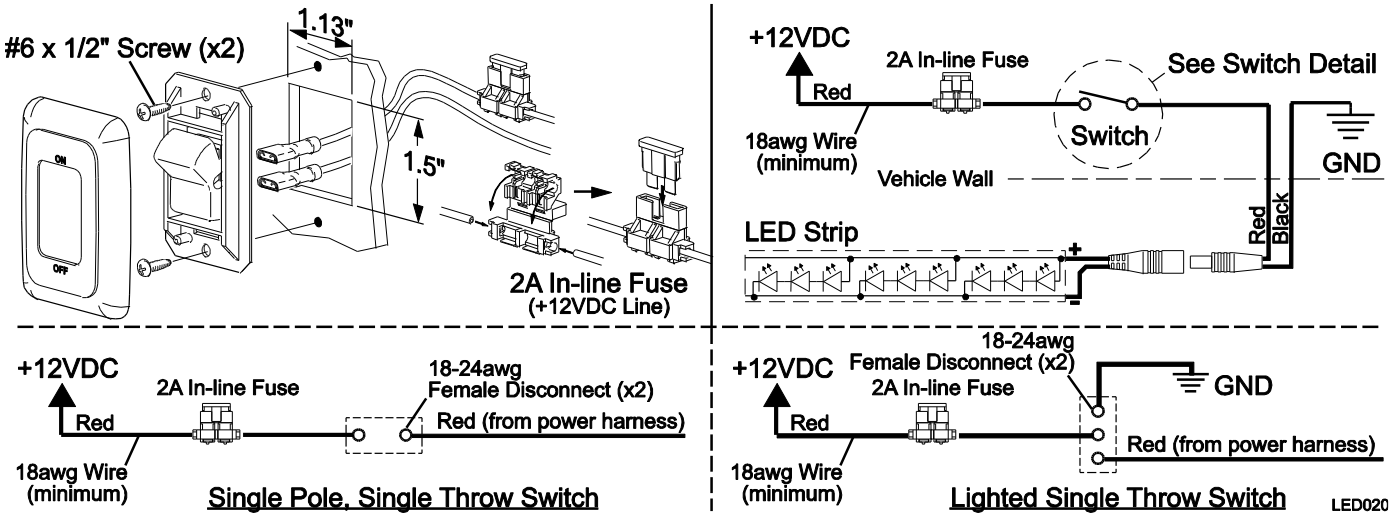

1. Determine the location of the switch.
2. At the switch location, cut a 1 1/8" x 1 1/2" hole.
3. Wire the switch as shown below. Wire terminals at the switch are .187, 18-24 awg female disconnects.

   NOTE: Allow adequate slack in the 12VDC power line so that the in-line fuse (installed in step 4) can be accessed from behind the switch.
4. Install the in-line fuse:
   - 4.1. Near the switch, cut the red 12VDC power line to the switch. Do not strip the insulation.
   - 4.2. Insert a wire end into one of the wire channels until it butts up against the stop.
   - 4.3. Fold that half of the connector body over until the element contacts the wire. Use pliers to crimp the connector closed.
   - 4.4. Repeat for the second wire end.
   - 4.5. Slide the fuse into the fuse port. Ensure that it is firmly seated.
5. Press the in-line fuse, wires and switch into the mounting hole. Secure the switch using two (2) #6 x 1/2" screws.
6. Snap the switch bezel over the switch frame.

PITCH ADJUSTMENT

The pitch for Freedom Freestyle WM can be adjusted to optimize the installation.

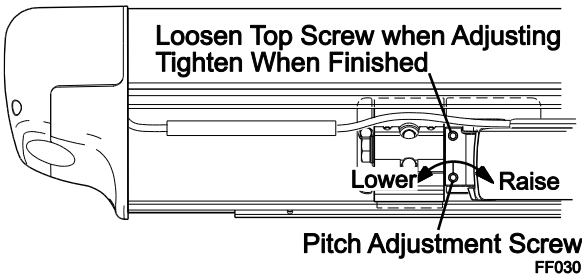

1. Open the awning to access the adjustment screws located on the arm case knuckles.
2. Have a second person lift up on the lead rail to relieve the pressure on the adjustment screws.
3. Using a 4mm allen wrench, loosen the top screw. Turn the bottom adjustment screw clockwise to raise the lead rail; turn the adjustment screw counterclockwise to lower the lead rail.
4. When the pitch is set at the desired angle, tighten the top screw.
5. Repeat for each arm. Ensure that the lead rail is parallel with the awning case.

NOTE: The Freedom Freestyle WM lead rail self-adjusts to accommodate the pitch. No adjustment is required to the lead rail when the pitch is adjusted.

MANUAL OVERRIDE

If power to the vehicle is not available, the awning can be safely retracted using the manual override located on the idler (right) end of the case.

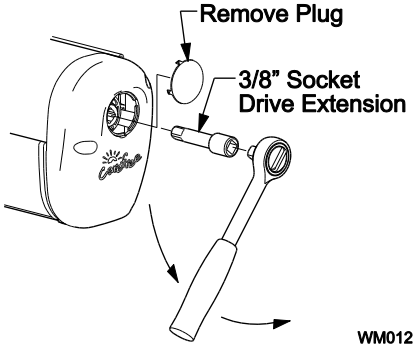

NOTE: This procedure cannot be used to extend the awning.

1. Remove the plug from the right endcap and save.
2. Insert a 3/8" socket drive extension and handle into the square drive hole inside the endcap.
3. Turn the handle counterclockwise until the awning is retracted.
4. Replace the plug.

NOTICE After closing the awning with the manual override, the lead rail may move out from the case 1/4" - 1/2". This is normal and the awning is secure for travel until power is restored or repairs are completed. Do not attempt to force the lead rail in with the override, serious damage can occur to the awning.

SETTING THE MOTOR LIMITS – AWNINGS PRODUCED PRIOR TO 10/1/2026

TUBULAR MOTOR

The motor limit switches are preset at the factory for best operation of the awning. The "OUT" limit switch is used to stop the motor when the awning is fully extended. The "IN" limit switch is used to stop the motor when the awning is fully retracted.

The limit switches are located inside the motor endcap.

To access the switches, remove the outer motor endcap and plug.

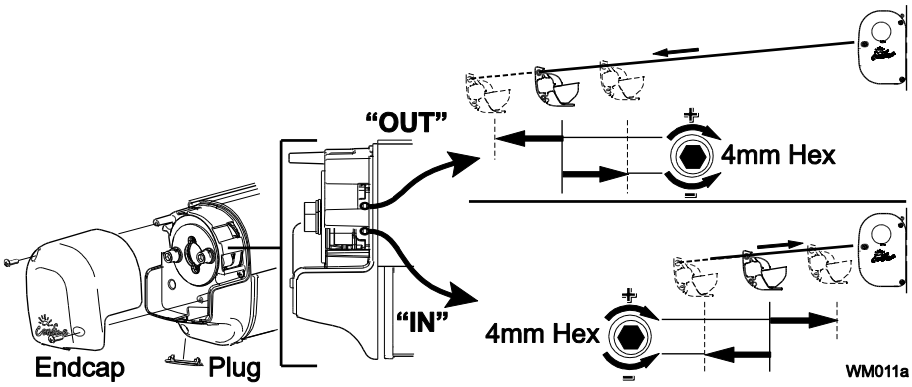

Out Limit Switch

1. Extend the awning out completely.
2. Confirm that the arms are fully extended. The motor should stop and the fabric should be tight. If the motor continues to run, the fabric will sag; or, if the motor quits before the arms are fully extended, it will be necessary to adjust the "OUT" limit switch.

   NOTE: It is best to make the adjustments in increments of a single turn. 3 full turns of the screw equals approximately 2" of fabric extension.
3. If the fabric sags:
   3.1. Retract the awning until the fabric is tight then retract an addition 10"-12".
   3.2. Using a 4mm Allen wrench turn the "OUT" limit switch COUNTERCLOCKWISE to reduce the time the motor runs.
   3.3. Extend to confirm that the adjustment is correct.
   3.4. Repeat the procedure until the awning extends correctly.
4. If the arms do not extend completely:
   4.1. Retract the awning approximately 10"-12".
   4.2. Using a 4mm Allen wrench turn the "OUT" limit switch CLOCKWISE to increase the time the motor runs.
   4.3. Extend to confirm that the adjustment is correct.
   4.4. Repeat the procedure until the awning extends correctly.

IN Limit Switch

NOTE: The "in" limit switch is not adjusted when the electronic control system is installed. The system electronics monitors the motor and shuts the motor off when the awning is fully retracted.

If the "in" limit switch is accidently adjusted, the motor may shut off before the awning is fully closed. If this occurs, turn the "in" adjustment screw clockwise. It is not necessary that the screw matches the closed position. The electronics controls the shutoff in the closed position.

ADJUSTING THE EXTEND LIMIT – AWNINGS PRODUCED AFTER 10/1/2026

The extend limit switch disables the extend function when the awning is fully extended. This prevents the awning from being overextended and can be adjusted so that the canopy is tight when the awning is fully extended. The switch is located on the arm knuckle closest to the motor (the left knuckle).

1. Open the awning to access the switch.
2. Loosen the screw.
3. Move the switch toward the arm to decrease the extension.
4. Move the switch away from the arm to increase the extension.
5. Tighten screw once position is set.

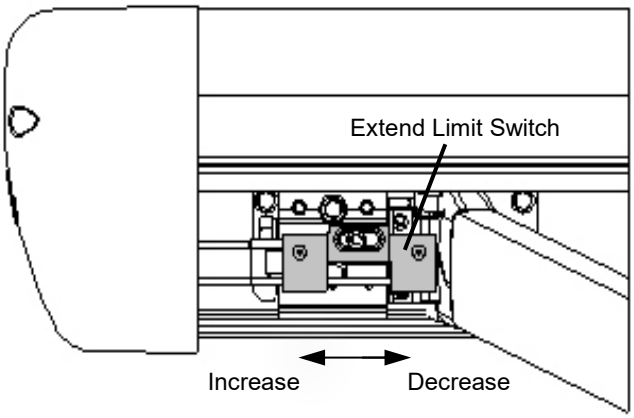

OEM INSTALLATION AUDIT/APPROVAL FORM

OEM NAME: _____ **LOCATION OR PLANT #:** _____

AUDIT RSM: _____ **DATE:** _____

UNIT #: _____ **COACH MODEL:** _____

PRODUCT DESCRIPTION: _____

AWNING SERIAL NUMBER / DATE CODE: _____

CONFIRM ALL OF THE INSTALLATION SECTIONS ARE BEING ACCOMPLISHED. NOTE DESCREPANCIES BELOW.

Use the space below to note any observations and deviations from this installation manual related to the installation.

_____

_____

_____

_____

_____

_____

_____

_____

_____

_____

_____

_____

A complete wiring diagram is required to be submitted to Carefree for review and approval from the OEM and appended to this approval for motorized installations. Review the above with the appropriate OEM production personnel and have this form signed as recognizing and understanding all discrepancies and corrective action. Take a picture of this page, noting the revision and part number is visible. Send a PDF to OEMTECHREPORT@carefreeofcolorado.com> including wiring diagram. Leave a copy with the OEM, one copy for RSM files and one copy for OEM Applications Manager.

_____ _____

OEM Representative (please print)	***OEM Signature***
OEM Position	***Date***
Carefree Representative (please print)	***Carefree Signature/Date***

Disclaimer: Carefree performs audits as a service for our customers to help identify situations where installations may not conform to installation instructions, and to identify any potential installation errors. Audits are a random, one-time checkin time and do not verify all the attributes specified in the installation instructions. Carefree cannot be held responsible for any damage or costs as a result of incorrect installation. OEMs must always install products according to installation instructions. This document does not constitute liability or culpability on Carefree's part for incorrect installations performed by the OEM, dealer, service provider or the consumer.